LeKe Piping

BUTT-WELDING FITTINGS STANDARD

BUTT-WELDING PIPE FITTINGS AUSTENITIC & DUPLEX STAINLESS STEELS SPECIFIC INSPECTION

EN 10253-4:2008

Austenitic and duplex stainless-steel fittings: specific inspection requirements

- ELBOWS & RETURN BENDS
- TEES & REDUCERS
- CAPS
- CHEMICAL COMPOSITION
- MECHANICAL PROPERTIES
- INSPECTION & TESTING

Technical reference prepared for product and project requirement review.

Confirm final material, dimensions, testing and documentation before ordering.

LEKE PIPING

www.lkpiping.com

EN 10253-4:2008

Technical data navigation

Use the index below to open the corresponding technical section.

SECTION	CONTENTS	PAGE
Scope, references & designation	Scope, fitting types, steel categories, terms and ordering designation	**3**
Ordering & manufacturing	Purchaser information, forming routes, heat treatment and welding controls	**9**
Materials & technical requirements	Steel grades, chemistry, mechanical properties and corrosion resistance	**14**
Dimensions & tolerances	Elbows, reducers, tees, caps, wall thickness and welding ends	**23**
Inspection, sampling & testing	Inspection documents, test units, mechanical tests, NDT and marking	**34**
Annex calculations & pressure factors	Structural dimensions, wall-thickness calculations and pressure-factor tables	**39**
Project support	RFQ information and direct contact details	**98**

REFERENCE NOTE

Source dimensional values and footnotes are retained. Confirm the applicable material, grade, schedule and project specification before ordering.

Foreword

This document (EN 10253-4:2008) has been prepared by Technical Committee ECISS/TC 29 “Steel tubes and fittings for steel tubes”, the secretariat of which is held by UNI/UNSIDER.

This European Standard shall be given the status of a national standard, either by publication of an identical text or by endorsement, at the latest by September 2008, and conflicting national standards shall be withdrawn at the latest by September 2008.

Attention is drawn to the possibility that some of the elements of this document may be the subject of patent rights. CEN [and/or CENELEC] shall not be held responsible for identifying any or all such patent rights.

This document has been prepared under a mandate given to CEN by the European Commission and the European Free Trade Association, and supports essential requirements of the EU Directive 97/23/EC.

For relationship with the EU Directive 97/23/EC, see informative Annex ZA, which is an integral part of this document.

EN 10253 comprises a series of European Standards about *Butt-welding pipe fittings*, namely:

— *Part 1: Wrought carbon steel for general use and without specific inspection requirements*

— *Part 2: Non alloy and ferritic alloy steels with specific inspection requirements*

— *Part 3: Wrought austenitic and austenitic-ferritic (duplex) stainless steels without specific inspection requirements*

— *Part 4: Wrought austenitic and austenitic-ferritic (duplex) stainless steels with specific inspection requirements*

In writing EN 10253 the competent committee recognized that there are two broad types of products commonly used for stainless steels, and decided to reflect these in the standard by differentiating between two parts, Part 3 and Part 4.

Part 4 defines two types of fittings: Type A fittings have the same wall thickness at the welding ends than a pipe having the same specified wall thickness. Their resistance to internal pressure is, in general, less than that of a straight pipe with the same dimensions. Type B fittings showing increased wall thickness at the body of the fitting are designed to resist the same internal pressure as a straight pipe with same dimensions. These two types of fittings are intended to be used in applications covered by the EU Directive 97/23/EC. According to this Directive and further interpretation guidelines (e.g. guideline 7/19), seamless fittings are considered as materials whereas welded fittings are considered as components. Therefore, in some areas of this European Standard, provisions for seamless and welded fittings are different.

The committee recognized the need to provide a basic type in which the minimum wall thickness of the fitting is guaranteed without formal reference to the pressure resistance. This type is considered in Part 3 and includes products not intended for use in applications covered by the Pressure Equipment Directive category I – IV except applications according to Article 3 Paragraph 3.

Information about structural dimensions of fittings is given in Annex A.

For fittings specified in accordance with this part of EN 10253, the resistance to internal pressure of the fitting may be determined by calculation. Annex B gives information about the calculation.

For some wall thickness series Annex C lists pressure factors for fittings type A and Annex D lists wall thickness values for the body of the fittings of fittings type B.

EN 10253-4:2008 (E)

According to the CEN/CENELEC Internal Regulations, the national standards organizations of the following countries are bound to implement this European Standard: Austria, Belgium, Bulgaria, Cyprus, Czech Republic, Denmark, Estonia, Finland, France, Germany, Greece, Hungary, Iceland, Ireland, Italy, Latvia, Lithuania, Luxembourg, Malta, Netherlands, Norway, Poland, Portugal, Romania, Slovakia, Slovenia, Spain, Sweden, Switzerland and the United Kingdom.

Introduction

The European Committee for Standardisation (CEN) draws attention to the fact that it is claimed that compliance with this document may involve the use of patents applied to steel grade 1.4410, the compositions of which is given in Table 3.

CEN takes no position concerning the evidence, validity and scope of these patent rights.

The holder of these patent rights has assured CEN that they are willing to negotiate licences, under reasonable and non-discriminatory terms and conditions, with applicants throughout the world. In this respect, the statements of the holders of these patent rights are registered with CEN. Information may be obtained from:

Sandvik AB
SE-811 81 SANDVIKEN
Sweden

Attention is drawn to the possibility that some of the elements within this document may be the subject of patent rights other than those indicated above. CEN shall not be responsible for identifying any or all such patents rights.

1 Scope

1.1 This European Standard specifies the technical delivery requirements for seamless and welded butt-welding fittings (elbows, concentric and eccentric reducers, equal and reducing tees, caps) made of austenitic and austenitic-ferritic (duplex) stainless steel which are intended for pressure and corrosion resisting purposes at room temperature, at low temperature or at elevated temperatures.

It specifies:

— the type of fittings;

  — type A (see 7.2)

  — type B (see 7.3)

— the steel grades;

— the mechanical properties;

— the dimensions and tolerances;

— the requirements for inspection and testing;

— the inspection documents;

— the marking;

— the handling and packaging.

NOTE In the case of a harmonised supporting standard for materials, presumption of conformity to the Essential Requirement(s) (ESRs) is limited to technical data of materials in the standard and does not presume adequacy of the material to a specific item of equipment. Consequently the technical data stated in the material standard should be assessed against the design requirements of this specific item of equipment to verify that the ESRs of the Pressure Equipment Directive (PED) are satisfied.

1.2 Unless otherwise specified in this European Standard the general technical delivery requirements in EN 10021 apply.

2 Normative references

The following referenced documents are indispensable for the application of this document. For dated references, only the edition cited applies. For undated references, the latest edition of the referenced document (including any amendments) applies.

EN 287-1, *Qualification test of welders - Fusion welding - Part 1: Steels*

EN 473, *Non destructive testing - Qualification and certification of NDT personnel - General principles*

EN 910, *Destructive tests on welds in metallic materials – Bend test*

EN 1418, *Welding personnel - Approval testing of welding operators for fusion welding and resistance weld setters for fully mechanized and automatic welding of metallic materials*

EN 10002-1, *Metallic materials - Tensile testing - Part 1: Method of test at ambient temperature*

EN 10253-4:2008 (E)

EN 10002-5, *Metallic materials - Tensile testing - Part 5: Method of testing at elevated temperature*

EN 10021:2006, *General technical delivery conditions for steel products*

EN 10027-1, *Designation systems for steels - Part 1: Steel names*

EN 10027-2, *Designation systems for steels - Part 2: Numerical system*

EN 10028-7, *Flat products made of steels for pressure purposes - Part 7: Stainless steels*

EN 10045-1, *Metallic materials – Charpy impact test - Part 1: Test method*

EN 10088-2, *Stainless steels - Part 2: Technical delivery conditions for sheet/plate and strip of corrosion resisting steels for general purposes*

EN 10168, *Steel products - Inspection documents - List of information and description*

EN 10204, *Metallic products - Types of inspection documents*

EN 10216-5, *Seamless steel tubes for pressure purposes - Technical delivery conditions - Part 5 : Stainless steel tubes*

EN 10217-7, *Welded steel tubes for pressure purposes - Technical delivery conditions - Part 7: Stainless steel tubes*

EN 10266:2003,*Steel tubes, fittings and structural hollow sections - Symbols and definitions of terms for use in product standards*

EN 10272, *Stainless steel bars for pressure purposes*

EN 13445-3, *Unfired pressure vessels - Part 3: Design*

EN 13480-3:2002, *Metallic industrial piping - Part 3: Design and calculation*

EN ISO 377:1997, *Steel and steel products - Location and preparation of samples and test pieces for mechanical testing (ISO 377:1997)*

EN ISO 1127, *Stainless steel tubes - Dimensions, tolerances and conventional masses per unit length (ISO 1127:1992)*

EN ISO 3166-1, *Codes for the representation of names of countries and their subdivisions - Part 1: Country codes (ISO 3166-1:2006)*

EN ISO 3651-2, *Determination of resistance to intergranular corrosion of stainless steels - Part 2: Ferritic, austenitic and ferritic-austenitic (duplex) stainless steels - Corrosion test in media containing sulfuric acid (ISO 3651-2:1998)*

EN ISO 6708, *Pipework components - Definition and selection of DN (nominal size) (ISO 6708:1995)*

EN ISO 14284, *Steel and iron - Sampling and preparation of samples for the determination of chemical composition (ISO 14284:1996)*

EN ISO 15614-1, *Specification and qualification of welding procedures for metallic materials - Welding procedure test - Part 1: Arc and gas welding of steels and arc welding of nickel and nickel alloys (ISO 15614-1:2004)*

3 Terms and definitions

For the purposes of this document, the relevant definitions given in EN 10020:2000, EN 10021:2006, EN 10052:1993, EN 10079:2007 and EN ISO 377:1997 apply, except as defined below.

3.1
model
for elbows and return bend, the model defines the bending radius of the piece

3.2
welded fitting

3.2.1
fittings made from welded tubes

3.2.2
fittings made from sheet/plate or strip where welding is a part of the manufacturing process

3.3
seamless fitting
fittings manufactured without welding from starting material which is not welded

3.4
purchaser
person or organisation that orders products in accordance with this European Standard.

NOTE The purchaser is not necessarily, but may be, a manufacturer of pressure equipment in accordance with the EU Directive listed in Annex ZA. Where a purchaser has responsibilities under this EU Directive, this standard will provide a presumption of conformity with the essential requirements of the Directive so identified in Annex ZA

3.5
employer
organisation for which a person works on a regular basis.

NOTE The employer may be either the fitting manufacturer or supplier or a third party organisation providing a service, e.g. NDT

EN 10253-4:2008 (E)

4 Symbols

For the purposes of this document, the symbols given in EN 10266:2003 and the following apply.

DN, DN_1	Conventional dimension used in piping ; non measurable value (See EN ISO 6708) ;
D	Specified outside diameter for elbows, return ends, equal tees, caps and the major outside diameter for reducers and reducing tees, expressed in millimetres;
D_1	Specified minor outside diameter for reducers and reducing tees, expressed in millimetres;
T	Specified wall thickness at the welding ends for elbows, return bends and equal tees or on the D end for reducers and reducing tees, expressed in millimetres;
T_1	Specified wall thickness on the D_1 welding end of reducers and reducing tees, expressed in millimetres;
ID	Internal diameter at the welding ends of elbows, return bends, equal tees and at the major welding end of reducers and reducing tees ($ID = D - 2T$);
ID_1	Internal diameter at the minor welding end of reducers and reducing tees ($ID_1 = D_1 - 2T_1$);
C	Centre to centre distance for return bends (C=2R), expressed in millimetres;
B	Back to face distance for return bends, expressed in millimetres;
F	Distance from the axis of the centre line to the face of the branch outlet of reducing and equal tees, expressed in millimetres; distance from the centre of one face to the centre of bending of a 90° or a 45° elbow;
G	Distance from the axis of the centre line to the face of the branch outlet of reducing tees, expressed in millimetres;
H	Face to centre distance for 45° elbows, expressed in millimetres;
h	Distance from the face of the branch outlet to the body of the pulled tee, expressed in millimetres;
K	Total height for caps, expressed in millimetres;
L	Face to face distance for reducers, expressed in millimetres;
X	Tolerance on the form of fittings;
r	Inside knuckle radius of cap;
R	Bending radius of elbows and return bends, expressed in millimetres;
$R1$	Inside spherical radius of cap;
R_m	Tensile strength at room temperature, expressed in MPa;
$R_{p0,2}$	Minimum 0,2 % proof strength at room temperature, expressed in MPa;
$R_{p1,0}$	Minimum 1,0 % proof strength at room temperature, expressed in MPa;
A	Percentage of elongation after rupture, with reference to gauge length of 5,65 $\sqrt{S_0}$;
$W0$	Welded from hot or cold rolled plate, sheet or strip 1 D, 2 D, 2 E, 2 B (Symbols of flat products

according to EN 10088-2);

*W*1 Welded from hot rolled plate, sheet or strip 1 *D*, descaled;

*W*2 Welded from cold rolled plate, sheet or strip 2 *D*, 2 *E* and 2 *B*, descaled.

5 Classification of grades and designation

5.1 Classification of grades

Steels covered in this European Standard are classified according to their structure into:

— austenitic steels;

— austenitic–ferritic (duplex) steels.

For more details see EN 10088-1.

5.2 Designation of steel grades

For fittings covered by this European Standard the designation shall consist of:

— the number of this European Standard (EN 10253-4)

plus either:

— the steel name in accordance with EN 10027-1;

or:

— the steel number allocated in accordance with EN 10027-2.

6 Information to be supplied by the purchaser

6.1 Mandatory information

6.1.1 Designation of fittings

6.1.1.1 General

Fittings may be designated by their outside diameter *D* (and D_1) or by their inside diameter *ID* (and $I\,D_1$).

6.1.1.2 Elbows and return bends

Elbows and return bends are designated by the model, the angle and the inside diameter (*D* or *I D*) (Inside diameter related to metric series).

Models of elbows designated by their outside diameter *D* are:

2*D*, 3 *D* and 5 D_1)

Models of elbows designated by their inside diameter *I D* are:

I D + 100, 3 *I D* and 5 *I D*

EN 10253-4:2008 (E)

6.1.1.3 Reducers

Reducers are designated by the model (concentric or eccentric), the major diameter (D or $I\,D$) and the minor diameter (D_1 or $I\,D_1$).

6.1.1.4 Tees

Equal tees are designated by the diameter (D or $I\,D$).

Reducing tees are designated by the major diameter (D or $I\,D$), the minor diameter (D_1 or $I\,D_1$).

6.1.1.5 Caps

Caps are designated by the diameter (D or $I\,D$).

6.1.2 Information

The following information shall be supplied by the purchaser at the time of enquiry and order:

a) the quantity required (number of pieces);

b) the designation of fittings (see 6.1.1) and the wall thickness $T(T_1)$;

c) the structural dimensions according to 11.1.2;

d) the designation of the steel grade according to this European Standard;

e) the reference to this European Standard;

f) the type of fitting, A or B;

g) seamless (s) or welded (w).

6.2 Options

A number of options are specified in this European Standard and these are listed below. In the event that the purchaser does not indicate a wish to implement any of these options at the time of enquiry and order, the fittings shall be supplied in accordance with the basic specification (see 6.1).

1) method of manufacture of the fitting (see 8.2.1);

2) starting product form and /or delivery condition (see 8.2.1);

3) heat treatment of the fittings (see 8.2.3.1);

4) product analysis (see 9.2.2);

5) verification of impact properties at room temperature (see 9.3.1);

6) agreed mechanical properties at room temperature for austenitic stainless steel fittings with wall thicknesses greater than 60 mm (see Table 6);

7) verification of tensile properties at elevated temperature (see 9.3.2);

8) verification of impact properties at low temperature (see 9.3.3);

9) intergranular corrosion test (see 9.4);

10) pickling (see 10.1.9);

11) shot blasting, brushing or bright annealing (see 10.1.9);

12) pickling and passivation (see 10.1.9);

13) fittings are ordered with tolerance class D 3 or D 4 (see Table 8);

14) special ends preparation (see 11.3);

15) type of inspection document other than the standard document (see 12.2.1);

16) special test size units smaller than those specified in Table 11 (see Table 11);

17) verification of tensile properties on the weld at room temperature (see Table 12);

18) verification of impact properties transverse to the weld (see 13.2.6);

19) liquid penetrant examination of weld and weld ends (see 14.9.2);

20) liquid penetrant examination of surfaces (see 14.9.2);

21) ultrasonic testing of strip or plates (see 14.9.2);

22) additional marking (see 15.1);

23) special packaging (see Clause 16).

6.3 Examples of an order

6.3.1 Example 1

1000 welded elbows in accordance with this European Standard of model 3D with angle 90° and dimensions 60,3 x 2,9 not having an increased wall thickness at the body of the fitting (type A) and with a bending radius according to Annex A made of steel grade 1.4436.

1000 elbows – w – EN 10253-4 – type A – model 3D – 90° – 60,3 x 2,9 – 1.4436.

6.3.2 Example 2

2000 seamless concentric reducers in accordance with this European Standard with dimensions 219,1 x 6,3 – 139,7 x 4,0 with an increased wall thickness at the body of the fitting (type B) and with a length according to Annex A made of steel grade X2CrNi19-11.

2000 concentric reducers – s– EN 10253-4 – type B – 219,1 x 6,3 – 139,7 x 4,0 – X2CrNi19-11.

6.3.3 Example 3

3000 welded and pulled equal tees in accordance with this European Standard with dimension *ID* 40,0 x 2,0 not having an increased wall thickness at the body of the fitting (type A) made of steel grade 1.4301 with their surface pickled.

3000 equal tees – w – EN 10253-4 – type A – ID 40,0 x 2,0 – 1.4301 – option 10

7 Resistance to internal pressure

7.1 General

The resistance to internal pressure of a fitting conforming to this European Standard shall be determined according to the relevant design rules laid down in e.g. EN 13480-3 or EN 13445-3.

7.2 Fittings of type A

Fittings of type A have the same wall thickness at the welding ends and on the body of the fitting. Their resistance to internal pressure is less than that of a pipe with the same specified diameter, wall thickness and of the same steel grade. The determination of pressure factors and wall thickness is given in Annex B and tables of pressure factors are given in Annex C.

For reducers the wall thickness at the conical section shall be the specified wall thickness at the major end.

7.3 Fittings of type B

Fittings of type B have increased wall thickness at the body of the fitting. They will, in general, withstand the same internal pressure as a pipe with the same specified diameter, wall thickness and of the same steel grade.

Wall thickness requirements of this type of fittings are defined by the calculation procedures given in Annex B. For some commonly used, specified wall thicknesses the resulting wall thicknesses at the body of the fitting are listed in the tables given in Annex D.

8 Manufacturing process

8.1 Steelmaking process

The steelmaking process is left at the discretion of the steel manufacturer.

8.2 Product making process for fittings and heat treatment

8.2.1 Product making process

The different allowed processes and the relevant starting product forms are listed in Table 1. The method of manufacturing is left at the discretion of the manufacturer.

The product making process shall be so applied that it will not produce injurious imperfections in the fittings.

Where tubes are used as starting material, following conditions shall apply:

— when manufacturing fittings from tubes, tubes according to EN 10216-5 (seamless) and EN 10217-7 (welded) shall be used.

Where plate/strip are used as starting material, the following conditions shall apply.

— when manufacturing fittings from plate / strip, plate / strip according to EN 10028-7 shall be used.

Where bars are used as starting material, the following conditions shall apply:

— when manufacturing fittings from bars, bars according to EN 10272 shall be used.

Table 1 — Product making process — Starting product forms [a]

Process	Hot deformation			Cold deformation		Machining from round bars (DN < 50)
	Bending [b]	Pressed in die [c]	Rolled, forged followed by machining	Bending [b]	Pressed in die [c]	
Elbows	1, 2, 4, 5	1, 2, 3, 4, 5	-	1, 2, 4, 5	1, 2, 3, 4, 5	-
Tees	-	1, 2, 3, 4, 5	4, 5	-	1, 2, 3, 4, 5	-
Reducers	-	1, 2, 3, 4, 5	4, 5	-	1, 2, 3, 4, 5	5
Caps	-	1, 2, 3, 4, 5	4, 5	-	1, 2, 3, 4, 5	5

[a] Starting product forms

1 Seamless pipe
2 Welded pipe
3 Plate and strip
4 Forging
5 Bar

[b] When producing elbows from welded pipe, the position of the weld is at the discretion of the manufacturer.

[c] For these processes welding with or without filler metal may be used (see 8.2.2). When filler metal is used it shall be compatible with the parent metal.

Option 1: *The method of manufacturing and/or details of the manufacturing process, e.g. welding operations or position of the weld before forming shall be as specified on the purchase order.*

Option 2: *The starting product form to be used and/or its delivery condition shall be as specified on the purchase order.*

8.2.2 Welding as part of the manufacturing process of the fitting

8.2.2.1 General

When producing fittings from plate or strip, welding is considered being a part of the manufacturing of fittings, the following criteria are valid:

— welding process/procedures shall be qualified in accordance with EN ISO 15614-1;

— welders and/or welding operators shall be qualified in accordance with EN 287-1 and/or EN 1418.

All welds carried out during the manufacture of the fitting shall be fusion weld type. All welds shall have complete penetration.

Local repair of weld seam which have been made with filler metal is permitted provided that the repair procedure/welders are qualified in accordance with the relevant part of the above mentioned standards.

If heat treatment is required, the repair welding shall be carried out in advance.

8.2.2.2 Finished joint requirement

As welded surfaces are permitted provided the surface imperfections permit proper interpretation of radiographic or other non-destructive examination.

A reduction in thickness due to the welding process is acceptable provided that the material of the joining surfaces shall not be reduced below minimum required thickness at any point.

Concavity due to the welding process on the root side of a single welded joint is permitted when the resulting thickness of the weld is at least equal to the minimum thickness of the thinner part of the parts being joined and the contour of the concavity is smooth.

The height of the reinforcement on each face of the weld shall not exceed the values specified in Table 2.

Table 2 — Height of reinforcement

Dimensions in millimetres

Base metal thickness (T)	Reinforcement
T < 2,5	1,0
2,5 ≤ T ≤ 5,0	1,5
5,0 < T ≤ 10,0	2,0
10,0 < T ≤ 25,0	2,5
25,0 < T ≤ 50,0	3,5

8.2.3 Heat treatment

8.2.3.1 Cold forming

Fittings, produced from solution annealed and quenched or stabilised materials using cold forming as manufacturing method, do not require heat treatment afterwards, if in the case of austenitic steels with required minimum values for elongation A_5 > 30 %, a 15 % level of cold deformation is not exceeded on the base material or if evidence is supplied that there is a minimum post cold-forming residual elongation A_5 of 15 %. In any case, the post cold-forming residual elongation shall be at least 14 %.

If heat treatment still will be demanded, this shall be agreed at the time of enquiry and order.

Option 3: *Heat treatment of the fittings shall be carried out.*

8.2.3.2 Hot forming

Fittings shall be solution annealed after forming operations.

9 Technical requirements

9.1 General

Fittings supplied and inspected in accordance with Clauses 7, 11 and 12, shall comply with the requirements of this European Standard.

In addition to the requirements of this European Standard, the general technical delivery requirements specified in EN 10021 shall apply.

9.2 Chemical composition

9.2.1 Cast analysis

The cast analysis reported by the steel manufacturer shall apply and comply with the requirements of Table 3 for austenitic steels and of Table 4 for austenitic-ferritic steels.

9.2.2 Product analysis

Option 4: *A product analysis shall be supplied.*

Table 5 specifies the permissible deviations of the product analysis from the specified cast analysis given in Tables 3 and 4.

Table 3 — Chemical composition (cast analysis)[a] of austenitic stainless steels, in % by mass

Steel grade		C	Si	Mn	P	S	N	Cr	Cu	Mo	Nb	Ni	Ti	Others
Steel name	Steel number	max.	max.	max.	max.	max.								
X2CrNi18-9	1.4307	0,030	1,00	2,00	0,045[b]	0,015[b]	≤ 0,11	17,50-19,50	_	_	_	8,00-10,00	_	_
X2CrNi19-11	1.4306	0,030	1,00	2,00	0,045[b]	0,015[b]	≤ 0,11	18,00-20,00	_	_	_	10,00-12,00	_	_
X2CrNiN18-10	1.4311	0,030	1,00	2,00	0,045[b]	0,015[b]	0,12-0,22	17,00-19,50	_	_	_	8,50-11,50	_	_
X5CrNi18-10	1.4301	0,07	1,00	2,00	0,045[b]	0,015[b]	≤ 0,11	17,00-19,50	_	_	_	8,00-10,50	_	_
X6CrNiTi18-10	1.4541	0,08	1,00	2,00	0,045[b]	0,015[b]	_	17,00-19,00	_	_	_	9,00-12,00	5xC-0,70	_
X6CrNiNb18-10	1.4550	0,08	1,00	2,00	0,045[b]	0,015[b]	_	17,00-19,00	_	_	10xC-1,00	9,00-12,00	_	_
X1CrNi25-21	1.4335	0,020	0,25	2,00	0,025	0,010	≤ 0,11	24,00-26,00	_	≤ 0,20	_	20,00-22,00	_	_
X2CrNiMo17-12-2	1.4404	0,030	1,00	2,00	0,045[b]	0,015[b]	≤ 0,11	16,50-18,50	_	2,00-2,50	_	10,00-13,00	_	_
X5CrNiMo17-12-2	1.4401	0,07	1,00	2,00	0,045[b]	0,015[b]	≤ 0,11	16,50-18,50	_	2,00-2,50	_	10,00-13,00	_	_
X6CrNiMoTi17-12-2	1.4571	0,08	1,00	2,00	0,045[b]	0,015[b]	_	16,50-18,50	_	2,00-2,50	_	10,50-13,50	5xC-0,70	_
X2CrNiMo17-12-3	1.4432	0,030	1,00	2,00	0,045[b]	0,015[b]	≤ 0,11	16,50-18,50	_	2,50-3,00	_	10,50-13,00	_	
X2CrNiMoN17-13-3	1.4429	0,030	1,00	2,00	0,045[b]	0,015[b]	0,12-0,22	16,50-18,50	_	2,50-3,00	_	11,00-14,00	_	_
X3CrNiMo17-13-3	1.4436	0,05	1,00	2,00	0,045[b]	0,015[b]	≤ 0,11	16,50-18,50	_	2,50-3,00	_	10,50-13,00	_	_
X2CrNiMo18-14-3	1.4435	0,030	1,00	2,00	0,045[b]	0,015[b]	≤ 0,11	17,00-19,00	_	2,50-3,00	_	12,50-15,00	_	_

EN 10253-4:2008 (E)

Table 3 *(concluded)*

Steel grade		C	Si	Mn	P	S	N	Cr	Cu	Mo	Nb	Ni	Ti	Others
Steel name	Steel number	max.	max.	max.	max.	max.								
X2CrNiMoN17-13-5	1.4439	0,030	1,00	2,00	0,040[b]	0,015[b]	0,12-0,22	16,50-18,50	_	4,00-5,00	_	12,50-14,50	_	_
X2CrNiMo18-15-4	1.4438	0,030	1,00	2,00	0,040[b]	0,015[b]	≤ 0,11	17,50-19,50	_	3,00-4,00	_	13,00-16,00	_	_
X1NiCrMoCu31-27-4	1.4563	0,020	0,70	2,00	0,030	0,010	≤ 0,11	26,00-28,00	0,70-1,50	3,00-4,00	_	30,00-32,00	_	_
X1NiCrMoCu25-20-5	1.4539	0,020	0,70	2,00	0,030	0,010	≤ 0,15	19,00-21,00	1,20-2,00	4,00-5,00	_	24,00-26,00	_	_
X1CrNiMoCuN20-18-7	1.4547	0,020	0,70	1,00	0,030	0,010	0,18-0,25	19,50-20,50	0,50-1,00	6,00-7.00	_	17.50-18,50	_	_
X1NiCrMoCuN25-20-7	1.4529	0,020	0,50	1,00	0,030	0,010	0,15-0,25	19,00-21,00	0,50-1,50	6,00-7,00	_	24,00-26,00	_	_

[a] Elements not listed in this table shall not be intentionally added to the steel without the agreement of the purchaser except for finishing the cast. All appropriate precautions are to be taken to avoid the addition of such elements from scrap and other materials used in production which would impair mechanical properties and the suitability of the steel.

[b] For fittings welded without filler material the sum of sulphur and phosphorus shall be maximum 0,040 %.

Table 4 — Chemical composition (cast analysis)[a] of austenitic-ferritc stainless steels, in % by mass

Steel grade		C	Si	Mn	P	S	N	Cr	Cu	Mo	Ni	Others
Steel name	Steel number	max.	max.	max.	Max.	max.						
X2CrNiMoN22-5-3	1.4462	0,030	1,00	2,00	0,035	0,015	0,10-0,22	21,00-23,00	_	2,50-3,50	4,50-6,50	_
X2CrNiN23-4	1.4362	0,030	1,00	2,00	0,035	0,015	0,05-0,20	22,00-24,00	0,10-0,60	0,10-0,60	3,50-5,50	_
X2CrNiMoN25-7-4[b]	1.4410	0,030	1,00	2,00	0,035	0,015	0,20-0,35	24,00-26,00	_	3,00-4,50	6,00- 8,00	_
X2CrNiMoCuWN25-7-4	1.4501	0,030	1,00	1,00	0,035	0,015	0,20-0,30	24,00-26,00	0,50-1,00	3,00-4,00	6,00-8,00	W: 0,50- 1,00
X2CrNiMoCuN25-6-3	1.4507	0,030	0,70	2,00	0,035	0,015	0,15-0,30	24,00-26,00	1,00-2,50	2,70-4,00	5,50-7,50	_

[a] Elements not listed in this table shall not be intentionally added to the steel without the agreement of the purchaser except for finishing the cast. All appropriate precautions are to be taken to avoid the addition of such elements from scrap and other materials used in production which would impair mechanical properties and the suitability of the steel.

[B] Patented steel grade

Table 5 — Permissible deviations of the product analysis from specified limits on cast analysis given in Tables 3 and 4

Element	Limiting value for the cast analysis in accordance width Tables 3 and 4 % by mass	Permissible deviation of the product analysis [a] % by mass
Carbon	≤ 0,030	+ 0,005
	> 0,030 ≤ 0,08	± 0,01
Silicon	≤ 1,00	± 0,05
Manganese	≤ 1,00	+ 0,03
	> 1,00 ≤ 2,00	+0,04
Phosphorus	≤ 0,030	+ 0,003
	> 0,030 to ≤ 0,045	+ 0,005
Sulphur	≤ 0,015	+ 0,003
Nitrogen	≤ 0,35	± 0,01
Chromium	> 16,50 ≤ 20,00	± 0,20
	> 20,00 ≤ 28,00	± 0,25
Copper	≤ 1,00	± 0,07
	> 1,00 ≤ 2,50	± 0,10
Molybdenum	≤ 0,60	± 0,03
	> 0,60 ≤ 1,75	± 0,05
	> 1,75 ≤ 7,00	± 0,10
Niobium	≤ 1,00	± 0,05
Nickel	≤ 1,00	± 0,03
	>1,00 ≤ 5,00	± 0,07
	> 5,00 ≤ 10,00	± 0,10
	> 10,00 ≤ 20,00	± 0,15
	> 20,00 ≤ 32,00	± 0,20
Titanium	≤ 0,70	± 0,05
Tungsten	≤ 1,00	± 0,05

[a] If several product analyses are carried out on one cast, and the contents of an individual element determined lie outside the permissible range of the chemical composition specified for the cast analysis, then it is only allowed to exceed the permissible maximum value or to fall short of the permissible minimum value, but not both for one cast.

9.3 Mechanical properties

9.3.1 At room temperature

The mechanical properties at room temperature of the fittings of this European Standard shall conform to the requirements given in Tables 6 and 7.

Option 5: *Impact properties shall be verified out at room temperature (see Tables 6 and 7). For fittings manufactured from welded tubes the location of the test pieces, from the weld or opposite to the weld, shall be agreed at the time of enquiry and order.*

Option 6: *(see Table 6).*

EN 10253-4:2008 (E)

9.3.2 At elevated temperature

The minimum proof strength $R_{p0,2}$ and $R_{p1,0}$ values at elevated temperature are specified in the relevant standard for the starting material dependent on the delivery form being used.

Option 7: *Proof strength $R_{p0,2}$ or $R_{p1,0}$ shall be verified at elevated temperature for austenitic steels. Proof strength $R_{p0,2}$ shall be verified at elevated temperature for austenitic-ferritic steels. The temperature for tensile testing shall be agreed at the time of enquiry and order.*

9.3.3 At low temperature

Impact energy values at specified low temperature shall conform to the requirements in Tables 6 and 7.

Option 8*: Impact properties shall be verified at low temperature (See Tables 6 and 7). For fittings manufactured from welded tubes the location of the test pieces, from the weld or opposite to the weld, shall be agreed at the time of enquiry and order.*

EN 10253-4:2008 (E)

Table 6 — Mechanical properties for wall thicknesses up to 60 mm [a] at room temperature and impact properties at room temperature and at – 196 °C of austenitic stainless steels in the solution annealed condition (+AT), heat treatment and information about resistance to intergranular corrosion *(continued)*

Steel grade		Hardness	Tensile properties at room temperature[b]					Impact properties[b]			Reference heat treatment conditions		Resistance to intergranular corrosion		Limit temp.
			Proof strength		Tensile strength[h]	Elongation[c]		Minimum average absorbed energy							
		HB max.	$R_{p0,2}$ MPa min.	$R_{p1,0}$ MPa min.	R_m MPa	*A* % min.		*KV* *J* min.			Solution temperature *d* °C	Cooling in *e*	*f*	Method of EN ISO 3651-2	°C[i]
Steel name	Steel number							at RT		at-196 °C					
						l	*t*	*l*	*t*	*t*					
X2CrNi18-9	1.4307	200	180	215	470-670	40	35	100	60	60	1000-1100	w, a	yes	A	350
X2CrNi19-11	1.4306	200	180	215	460-680	40	35	100	60	60	1000-1100	w, a	yes	A	350
X2CrNiN18-10	1.4311	210	270	305	550-760	35	30	100	60	60	1000-1100	w, a	yes	A	400
X5CrNi18-10	1.4301	200	195	230	500-700	40	35	100	60	60	1000-1100	w, a	yes[g]	A	300
X6CrNiTi18-10	1.4541	210	200	235	500-730	35	30	100	60	60	1020-1120	w, a	yes	A	400
X6CrNiNb18-10	1.4550	210	205	240	510-740	35	30	100	60	60	1020-1120	w, a	yes	A	400
X1CrNi25-21	1.4335	220	180	210	470-670	45	40	100	60	60	1030-1110	w, a	yes	A	400
X2CrNiMo17-12-2	1.4404	200	190	225	490-690	40	30	100	60	60	1020-1120	w, a	yes	A	400
X5CrNiMo17-12-2	1.4401	200	205	240	510-710	40	30	100	60	60	1020-1120	w, a	yes[g]	A	300
X6CrNiMoTi17-12-2	1.4571	210	210	245	500-730	35	30	100	60	60	1020-1120	w, a	yes	A	400
X2CrNiMo 17-12-3	1.4432	200	190	225	490-690	40	30	100	60	60	1020-1120	w, a	yes	A	400
X2CrNiMoN17-13-3	1.4429	220	295	330	580-800	35	30	100	60	60	1020-1120	w, a	yes	A	400
X3CrNiMo17-13-3	1.4436	200	205	240	510-710	40	30	100	60	60	1020-1120	w, a	yes[g]	A	300
X2CrNMo18-14-3	1.4435	200	190	225	490-690	40	30	100	60	60	1020-1120	w, a	yes	A	400
X2CrNiMoN17-13-5	1.4439	200	285	315	580-800	35	30	100	60	60	1100-1140	w, a	yes	C	400
X2CrNiMo18-15-4	1.4438	200	220	250	490-690	35	30	100	60	60	1100-1160	w, a	yes	C	400
X1CrMoCu31-27-4	1.4563	220	215	245	500-750	40	35	120	90	60	1100-1160	w, a	yes	C	400

EN 10253-4:2008 (E)

Table 6 *(end)*

Steel grade		Hardness	Tensile properties at room temperature[b]					Impact properties[b]			Reference heat treatment conditions		Resistance to intergranular corrosion		Limit temp.
			Proof strength		Tensile strength[h]	Elongation[c]		Minimum average absorbed energy							
		HB max.	$R_{p0,2}$ MPa min.	$R_{p1,0}$ MPa min.	R_m MPa	*A* % min.		*KV* *J* min.			Solution temperature *d* °C	Cooling in *e*	*f*	Method of EN ISO 3651-2	°C[i]
Steel name	Steel number							at RT		at-196 °C					
						l	*t*	*l*	*t*	*t*					
X1NiCrMoCu25-20-5	1.4539	220	220	250	520-720	35	30	120	90	60	1100-1150	w, a	yes	C	400
X1CrNiMoCuN20-18-7	1.4547	220	300	340	650-850	35	30	100	60	60	1180-1230	w, a	yes	C	400
X1NiCrMoCuN25-20-7	1.4529	220	300	340	600-800	40	40	120	90	60	1120-1180	w, a	yes	C	400

a For wall thicknesses greater than 60 mm the mechanical properties are subject to agreement at the time of enquiry and order. **Option 6:** *Agreed mechanical properties for wall thicknesses greater than 60 mm apply.*

b *l* = longitudinal ; *t* = transverse.

c See also 8.2.3.1.

d The maximum temperatures are for guidance only.

e w = water ; a = air ; cooling sufficiently rapid.

f When tested in accordance with EN ISO 3651-2 (Appropriate method, A or B or C, shall be as indicated) up to the limit temperatures indicated in the last column of this table.

g In delivery condition. (Normally not fulfilled in the sensitized condition).

h For the delivery conditions W 0, W 1 and W 2 which do not include solution annealing, the upper R_m limit may be exceeded by 70 MPa.

i Up to these temperatures, the material should, within 100 000 *h*, not have changed so as to show susceptibility of intergranular corrosion, when tested in conformity with EN ISO 3651-2.

Table 7 — Mechanical properties for wall thicknesses up to 30 mm at room temperature and impact properties at room temperature and at - 40 °C of austenitic-ferritic stainless steel in the solution annealed condition (+AT), heat treatment and information about resistance to intergranular corrosion

Steel grade		Hardness	Tensile properties at room temperature[a]				Impact properties[a]			Reference heat treatment conditions		Resistance to intergranular corrosion		Limit temp.
			Proof strength	Tensile strength	Elongation[b]		Minimum average absorbed energy							
		HB	$R_{p0,2}$ MPa	R_m MPa	*A* %		*KV* *J*			Solution temperature[c] °C	Cooling in *d*	*e*	Method in EN ISO 3651-2	*f* °C
		max.	min.		min.		min.							
							at RT		at -40 °C					
Steel name	Steel number				*l*	*t*	*l*	*T*	*t*					
X2CrNiMoN22-5-3	1.4462	290	450	700-920	25	20	120	90	40	1020-1100	w, a	yes	B	250
X2CrNiN23-4	1.4362	290	400	600-820	25	25	120	90	40	950-1050	w, a	yes	A	250
X2CrNiMoCuN25-6-3	1.4507	310	500	700-900	20	20	100	100	40	1080-1160	w	yes	B	250
X2CrNiMoN25-7-4	1.4410	310	550	800-1000	20	20	100	100	40	1040-1120	w	yes	B or C	250
X2CrNiMoCuWN 25-7-4	1.4501	310	550	800-1000	20	20	100	100	40	1080-1160	w	yes	B or C	250

a *l* = longitudinal ; *t* = transverse.

b See also 8.2.3.1.

c The maximum temperatures are for guidance only.

d w = water ; a = air ; cooling sufficiently rapid.

e When tested in accordance with EN ISO 3651-2 (Appropriate method, A or B or C, shall be as indicated) up to 250 °C.

f Up to these temperatures, the material should, within 100 000 h, not have changed so as to show susceptibility of intergranular corrosion, when tested in conformity with EN ISO 3651-2.

9.4 Corrosion resistance

The information given in Tables 6 and 7 refer to the resistance of the steels to intergranular corrosion when tested according to EN ISO 3651-2 to the indicated method A or B or C.

Guideline values for the limit temperature for susceptibility to intergranular corrosion are indicated in Tables 6 and 7.

Option 9: *A test for the resistance to intergranular corrosion shall be carried out.*

If other specific corrosion tests are required, they shall be agreed at the time of enquiry and order.

9.5 Weldability

Fittings covered by this European Standard are weldable; however account should be taken of the fact that the behaviour of the steel during and after welding is dependent not only on the steel, but also essentially on the conditions of preparing and carrying out the welding.

10 Appearance and internal soundness

10.1 Appearance

10.1.1 The fittings shall be free from internal and external surface defects that can be detected by visual inspection in accordance with this European Standard.

10.1.2 The internal and external surface finish of the fittings shall be typical of the manufacturing process and, where applicable, the heat treated condition employed. Normally the finish and surface condition shall be such, that any surface imperfections or marks requiring dressing shall be identified.

10.1.3 It shall be permissible to dress, by grinding or machining, surface marks and imperfections provided that, the wall thickness of the fitting in the dressed area is not less than the specified minimum wall thickness.

10.1.4 All dressed areas shall blend smoothly into the contour of the fitting.

10.1.5 Any surface imperfection, which demonstrates to be deeper than 5 % of the nominal thickness or 3 mm whichever is the lesser, but not less than 0,3 mm, shall be dressed. For mechanical marks the acceptance limit is 1,5 mm.

10.1.6 Fittings with surface imperfections, including mechanical marks, that encroach on the minimum wall thickness shall be considered defects and shall not comply with this European Standard.

10.1.7 If surface imperfections acceptable under 10.1.5 are not scattered and appear over a large area which is not acceptable as “workmanlike finish“, the fittings shall be rejected or alternatively subject to dressing as agreed between purchaser and manufacturer.

10.1.8 Repairs of the fitting parent metal shall only be carried out by grinding or machining.

10.1.9 The surface of the fittings shall be metallically clean by a method suitable to stainless steels (by pickling, or bright annealing or shot blasting).

Option 10: *Pickling shall be specified at the time of enquiry and order.*

Option 11: *Shot blasting or bright annealing shall be specified at the time of enquiry and order.*

Option 12: *Pickling and passivation shall be specified at the time of enquiry and order.*

10.2 Internal soundness

The weld area shall be free from cracks, lack of fusion and lack of penetration.

For the internal soundness, where appropriate, requirements together with the conditions for their verification shall be agreed at the time of enquiry and order.

11 Dimensions and tolerances

11.1 Dimensions

11.1.1 Diameter and wall thickness

Commonly used outside diameters and wall thicknesses covered by this European Standard are given in EN ISO 1127.

11.1.2 Structural dimensions of fittings

For reducers and tees it is not mandatory that the produced pieces correspond to the exact representation in the figures.

The structural dimensions:

— F for elbows 90 °;

— C and B for elbows 180 °;

— F and H for elbows 45 °;

— L for reducers;

— F and G for tees;

— K, $R1$, r for caps.

Dimensions of fittings specified by its outside diameter shall be according to Annex A. Structural dimensions of fittings specified by their internal diameter and for fittings not covered by Annex A shall be agreed at the time of enquiry and order.

EN 10253-4:2008 (E)

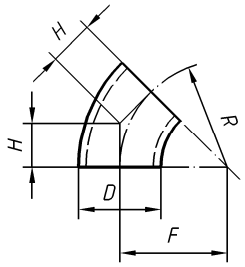

Figure 1 — 45° Elbow

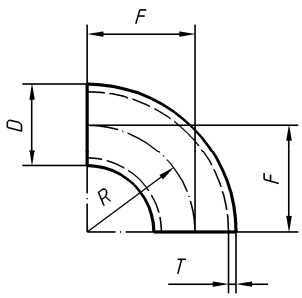

Figure 2 — 90° Elbow

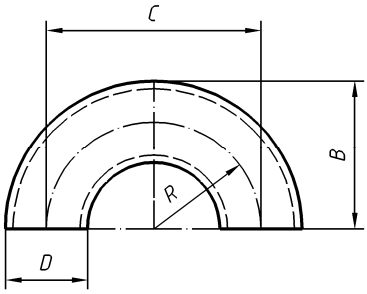

Figure 3 — Return bend

Elbows and return bends are produced according to Figures 1, 2 and 3 (45° - 90 ° - 180 °). Structural dimensions are listed in Annex A.

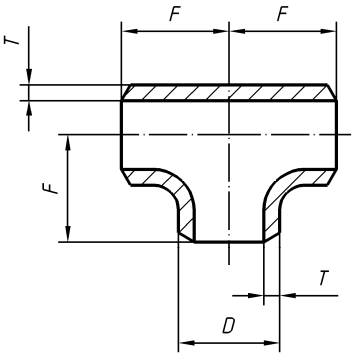

Figure 4 — Equal tee

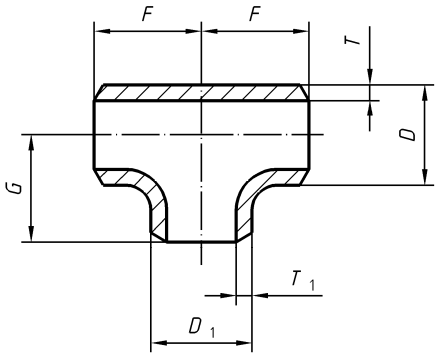

Figure 5 — Reducing tee

Equal tees are produced in accordance with Figure 4. Structural dimensions are listed in Annex A.

Reducing tees are produced in accordance with Figure 5. Structural dimensions are listed in Annex A.

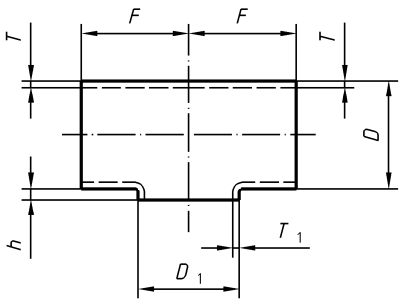

Figure 6 — Pulled tee

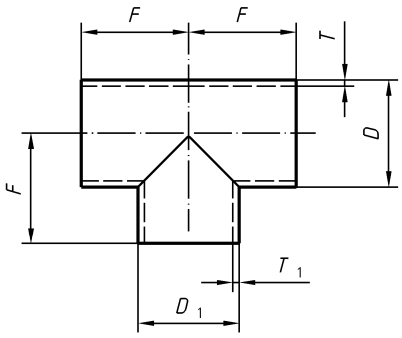

Figure 7 — Branch welded tee

Pulled tees are produced in accordance with Figure 6. Structural dimensions are listed in Annex A.

Branch welded tees are produced in accordance with Figure 7. Structural dimensions are listed in Annex A.

EN 10253-4:2008 (E)

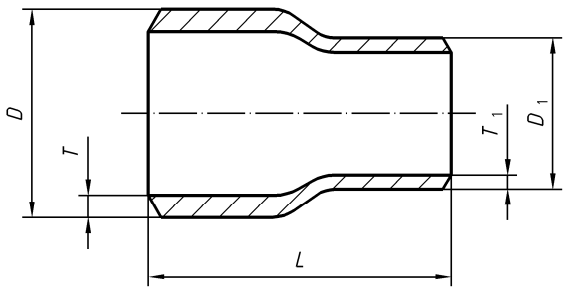

Figure 8 — Concentric reducer

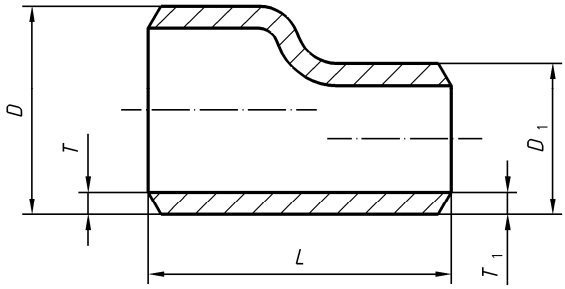

Figure 9 — Eccentric reducer

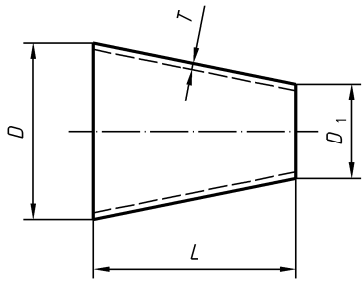

Figure 10 — Concentric reducer (straight)

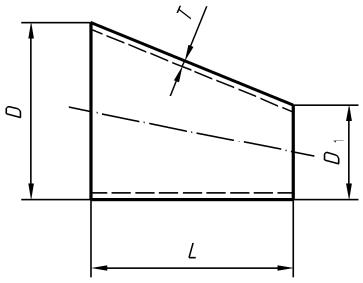

Figure 11 — Eccentric reducer (straight)

Concentric and eccentric reducers are produced in accordance respectively with Figures 8 - 11. Structural dimensions are listed in Annex A.

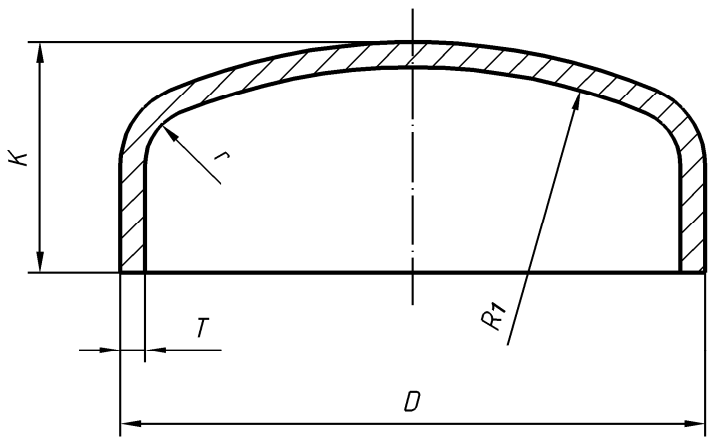

Key

$R1$ approximately equal to 0,8 D
r approximately equal to 0,15 D

Figure 12 — Cap

Caps are produced in accordance with Figure 12. Structural dimensions are listed in Annex A.

NOTE Some fittings are available on the market which do not comply with the principles in EN 13480-3. These are not listed in this standard and for these cases, the dimensions should be agreed at the time of enquiry and order on the understanding that they are not consistent with this standard.

11.2 Dimensional tolerances

11.2.1 Tolerances on diameter

Tolerances on outside diameter shall be measured at the welding ends.

In order to guarantee the regular flow of the fluid through the fitting, the internal diameter in any section of the fitting (not applicable to caps) shall be above 80 % (for tees 70 %) of the internal diameter at the welding ends.

Internal diameter is calculated as follows:

Internal diameter = D – 2 x nominal wall thickness

The diameter (D/ID) of fittings covered by this European Standard shall be within the tolerance limits given in Table 8.

EN 10253-4:2008 (E)

Table 8 — Tolerances on diameter *D/ID*

Tolerance on *D/ID*	
EN Tolerance class	**Permissible deviation**
D2	± 1,0 % or ± 0,5 mm whichever is the greater
D3[a]	± 0,75 % or ± 0,3 mm whichever is the greater
D4[a]	± 0,5 % or ± 0,1 mm whichever is the greater
[a] **Option 13**: *The fittings may be ordered with tolerance classes D3 or D4.*	

11.2.2 Out of roundness

The out-of-roundness (0) shall be calculated using the following equation:

$$0 = \frac{D_{max} - D_{min}}{D} 100 \qquad (1)$$

where

0 = out-of-roundness, in percentage;

D_{max} = maximum outside diameter D measured in the same plane, in millimetres;

D_{min} = minimum outside diameter measured in the same plane, in millimetres;

D = specified outside diameter, in millimetres.

For fittings of outside diameter $D \leq 406{,}4$ mm, out-of-roundness, shall be included in the limits of the diameter tolerances. Measurement shall be performed at the welding ends.

For fittings of outside diameter $D > 406{,}4$ mm and with D/T less than or equal to 100, out-of-roundness shall not exceed 2 %.

For fittings with a D/T ratio > 100 the values for out-of-roundness shall be agreed at the time of enquiry and order.

For elbows, the out–of–roundness on the body of the fitting shall not exceed 4 %.

11.2.3 Wall thickness tolerances at the welding ends

The wall thickness at the welding ends of fittings covered by this European Standard shall be within the tolerance limits given in Table 9. The minus tolerances apply also to the wall thickness at the body of the fitting.

Table 9 — Tolerances on wall thickness *T*

Diameter (*D*)	Wall thickness (*T*)	Permissible deviation	
		Minus	Plus
$D \leq 610$	all	- 12,5 %	+ 15 %
$D > 610$	≤ 10 mm	- 0,35 mm	+ 15 %
	> 10 mm	- 0,50 mm	+ 15 %

11.2.4 Tolerances on structural dimensions

For the dimensions specific to fittings, the tolerances are given in Table 10.

Table 10 — Tolerances on structural dimensions

Dimensions in millimetres

D	*F- G – H – L*	*B*	*C*	*K*
≤ 114,3	± 2	± 7	± 7	± 4
114,3 < *D* ≤ 219,1	± 2	± 7	± 7	± 7
219,1 < *D* ≤ 406,4	± 5	± 7	± 10	± 7
406,4 < *D* ≤ 762	± 5	± 10	± 10	± 7
762 < *D* ≤ 1219	± 10	± 10	± 10	± 10

11.2.5 Tolerances on the form of fittings

The tolerances on the form of every type of fitting (out–of–squareness, alignment) is the following:

X = 1 % of the outside diameter at the point measured or 1 mm, whichever is the greater (see Figure 13).

EN 10253-4:2008 (E)

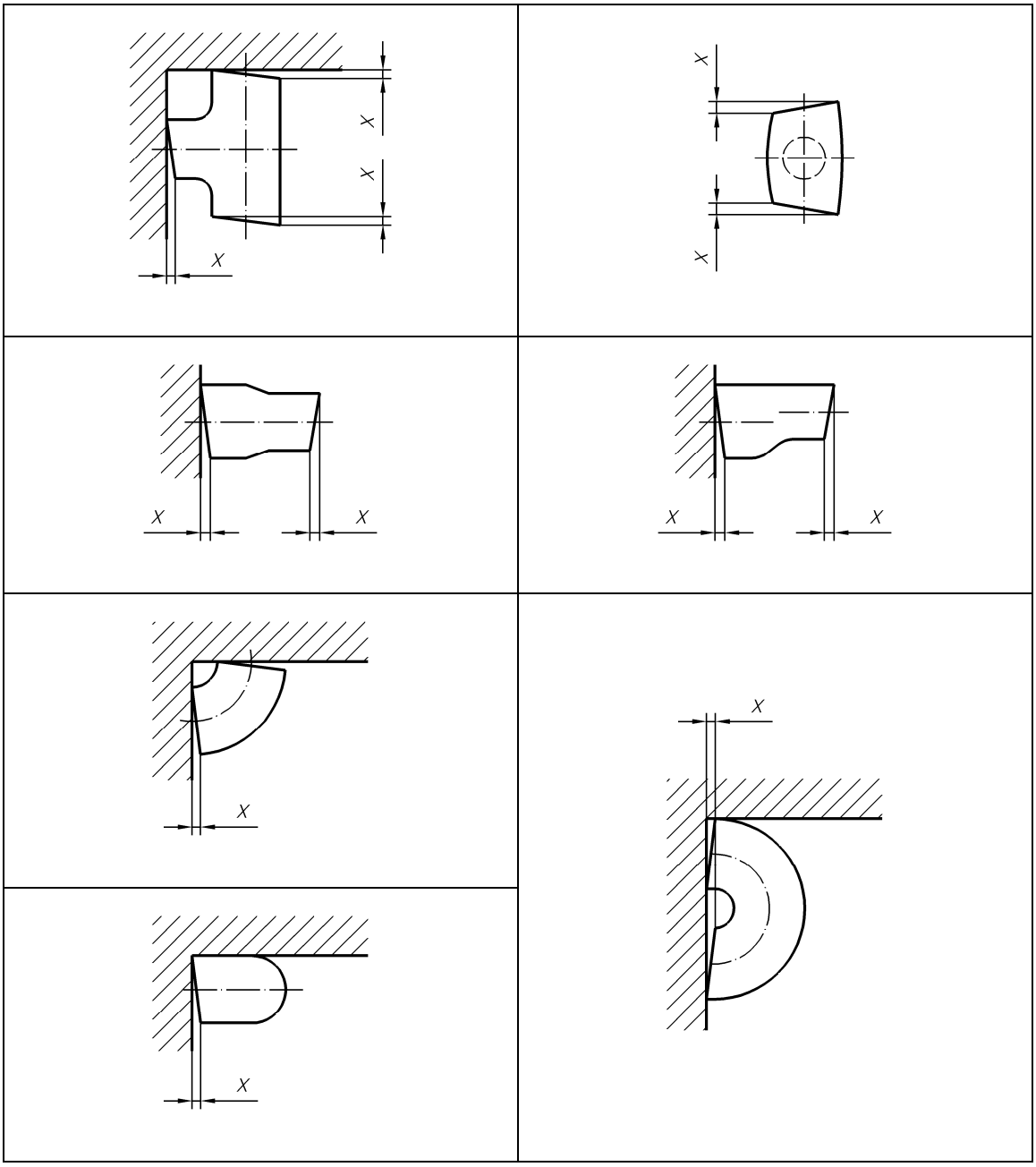

Figure 13 — Determination of the tolerance on the form of fittings

11.3 Performance of the end bevelling

Fittings shall be delivered with square cut ends. The ends shall be free from excessive burrs.

Option 14: *Fittings with wall thickness ≥ 3,2 mm shall be delivered with bevelled ends (see Figure 14). The bevel shall have an angle α of $(30\ ^{+5}_{0})°$ with a root face C of 1,6 mm ± 0,8 mm, except that for wall thickness greater than 20 mm, an agreed alternative bevel may be specified*

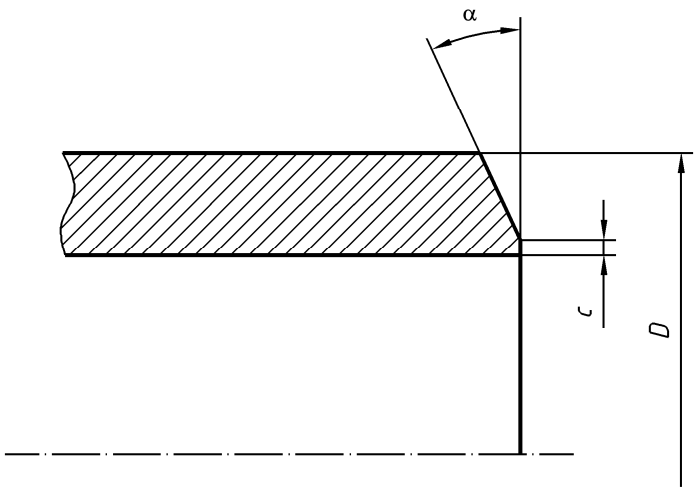

Key

α angle
c root face
D outside diameter

Figure 14— Fitting end bevel

12 Inspection

12.1 Type of inspection

Conformity to the requirements of the order, for fittings according to this European Standard, shall be verified by specific inspection.

When an inspection certificate 3.1 according to EN 10204:2007 is specified, the steel manufacturer shall state in the confirmation of the order whether he is operating according to a “quality-assurance system”, certified by a competent body established within the Community, and whether he has undergone a specific assessment for materials.

NOTE See EU Directive 97/23/EC Annex I section 4.3 third paragraph.

EN 10253-4:2008 (E)

12.2 Inspection documents

12.2.1 Types of inspection documents

Unless option 15 is specified, an inspection certificate 3.1 according to EN 10204, shall be issued.

Option 15: *An inspection document 3.2 in accordance with EN 10204 shall be issued.*

If an inspection document 3.2 is specified, the purchaser shall notify the manufacturer of the name and address of the organisation or person who is to carry out the inspection and produce inspection document. It shall be agreed which party shall issue the certificate.

12.2.2 Content of inspection documents

The content of the inspection document shall be in accordance with EN 10168.

In all types of inspection documents a statement on the conformity of the products delivered with the requirements of this specification and the order shall be included.

The inspection certificate or inspection report shall contain the following codes and information:

A – commercial transactions and parties involved;

B – description of products to which the inspection document applies;

C01-C03 – location of the samples and direction of the test pieces and testing temperature;

C10-C13 – tensile test;

C40-C43 – impact test if applicable;

C60-C69 – other tests (e.g. weld bend test);

C71-C92 – chemical composition on cast analysis (product analysis if applicable);

D01 – marking and identification, surface appearance, shape and dimensional properties;

D02-D99 – leak-tightness, NDT, material identification if applicable;

Z – validation.

In addition to inspection certificate 3.1 the manufacturer shall state the references to the certificate of the appropriate “quality-assurance system”, if applicable.

12.3 Summary of inspection and testing

The fittings shall be inspected and tested as specified at the time of enquiry and order.

Inspection and testing to be carried out are summarised in Table 12.

13 Sampling

13.1 Frequency of tests

13.1.1 Test unit

A test unit shall consist of fittings of the:

— same type;

— same specified dimensions;

— same manufacturing process;

— same steel grade;

— same welding process (welded fittings);

— same cast;

— same heat treatment batch;

— same production lot.

If fittings fulfil above description but are heat treated in several batches depending on dimension or number of pieces, it may be regarded as one test unit provided that following conditions are obtained:

— temperature may be controlled within a range of ± 15 °C;

— cooling conditions are similar;

— furnace is equipped with recording devices so that complete records of heat treatment are available.

Test unit shall be as indicated in Table 11.

Table 11 — Test unit

Diameter (D) mm	**Maximum number of pieces in a test unit**
$D < 60{,}3$	2500
$60{,}3 \leq D < 114{,}3$	1000
$114{,}3 \leq D \leq 219{,}1$	500
$219{,}1 < D \leq 323{,}9$	100
$323{,}9 < D \leq 610$	50
$610 < D \leq 1219{,}0$	25
$1219 < D$	10

Option 16: *The test unit size shall be as specified on the purchase order.*

13.1.2 Number of sample fittings per test unit

One sample fitting shall be taken from each test unit.

EN 10253-4:2008 (E)

Table 12 — Summary of inspection and testing

Type of inspection and test		Frequency of testing	Reference to
Mandatory tests	Cast analysis of the starting material	One per cast	14.1
	Tensile test at room temperature	One per each sample of test unit	14.2.1
	Weld bend test (welded fittings)	One per each sample of test unit	14.4
	Dimensional testing	See 14.7	
	Visual inspection	See 14.8	
	NDT of the weld seam (100 %)	See 14.9.2	
	Material identification	See 14.10	
Optional tests	Product analysis (option 4)	One per cast	14.1
	Tensile test at elevated temperature (option 7)	One per each sample of test unit	14.2.2
	Tensile test on the weld at room temperature (option 17) [a]	One per each sample of test unit	14.3
	Impact test at room temperature (option 5)	One per each sample of test unit	14.5
	Impact test at low temperature (option 8)	One per each sample of test unit	14.5
	Intergranular corrosion test (option 9)	One per each sample of test unit	14.6
	Impact test transverse to the weld in the HAZ (option 18)	One per each sample of test unit	14.5
	Liquid penetrant of weld and weld ends (option 19)	Agreement	14.9.2
	Liquid penetrant of surfaces (option 20)	Agreement	14.9.2
	Ultrasonic testing for detection of laminar imperfections (option 21)	Agreement	14.9.2

[a] **Option 17**: *Tensile test on the weld shall be carried out at room temperature.*

13.2 Preparation of samples and test pieces

13.2.1 Samples for product analysis

Samples for product analysis shall be taken from the test piece or samples for mechanical testing from the whole thickness of the fitting at same location as for the mechanical test samples, in accordance with EN ISO 14284.

13.2.2 Samples and test pieces for mechanical tests

The samples for the mechanical testing shall be taken and the corresponding test pieces prepared in accordance with the general conditions of EN ISO 377, as far as applicable. The test pieces may be taken from the fitting itself or from excess material, or shall be one that is produced from the same semi-finished product and has undergone the same heat treatment as the fitting.

13.2.3 Test piece for the tensile test on the base material

The test piece for the tensile test on the base material at room temperature shall consist of longitudinal segment, over length of the fitting or representative sample. The test shall be according to EN 10002–1.

13.2.4 Test piece for the tensile test on the weld

The test piece for the tensile test on the weld shall be taken transverse to the weld with the weld at the centre of the test piece.

13.2.5 Test piece for the weld bend test

The test pieces for the weld bend test at the root and face shall be taken and prepared in accordance with EN 910.

13.2.6 Test piece for the impact test

Three standard Charpy V-notch test pieces in accordance with EN 10045-1 shall be prepared. If the specified thickness is such that standard test pieces cannot be produced without flattening of the section, then test pieces of width less than 10 mm, but not less than 5 mm shall be prepared, the largest obtainable width shall be used.

The test pieces shall be taken transverse (where possible) to the fitting axis unless D_{min}, as calculated by the following equation, is greater than the specified outside diameter, in which case longitudinal test pieces shall be used :

$$D_{min} = (T - 5) + [756{,}25/(T\text{-}5)] \quad (1)$$

where

T is the specified wall thickness, in millimetres.

It is the responsibility of the purchaser to specify the location of the impacting testing e.g. base material, HAZ, weld.

Option 18: *Impact test transverse to the weld in the HAZ or in the weld shall be specified.*

13.2.7 Test piece for the intergranular corrosion test

The test piece for the intergranular corrosion test shall be taken in accordance with the requirements of EN ISO 3651-2.

14 Test methods

14.1 Chemical analysis

The elements to be determined and reported shall be those in Table 2 or 3 in accordance with the steel grade concerned.

14.2 Tensile test on the base material

14.2.1 At room temperature

The test shall be carried out at room temperature in accordance with EN 10002-1, and the following shall be determined:

— the tensile strength (R_m);

— the 0,2 % proof strength ($R_{p0,2}$) and where applicable, the 1,0 % proof strength ($R_{p1,0}$);

— the percentage elongation after fracture with a reference to a gauge length (L_0) of 5,65 $\sqrt{S_0}$; if a non proportional test piece is used, the percentage elongation value shall be converted to the value for a gauge length L_0 = 5,65 $\sqrt{S_0}$ using the conversion tables in EN ISO 2566-1.

For fittings with $D \leq$ 100 mm hardness testing shall be performed on 10 % of the fittings, at least on three items. For these fittings tensile strength, proof strength and percentage elongation after fracture of the starting material shall be reported to the purchaser.

On cold formed fittings of $D <$ 100 mm which have not received additional heat treatment, tensile testing may be replaced by a ring expanding test in accordance with EN ISO 8493. To equate to the minimum post cold forming residual elongation "A", an expansion rate of 20 % shall be achieved and confirmed on at least one fitting per test unit.

14.2.2 At elevated temperature

The test shall be carried out in accordance with EN 10002-5 at the temperature agreed in the order, and the 0,2 % proof strength ($R_{p0,2}$) and, where applicable, the 1,0 % proof strength ($R_{p1,0}$) shall be determined.

14.3 Transverse tensile test on the weld

The test shall be carried out in accordance with EN 10002-1 at room temperature and the tensile strength (R_m) shall be determined.

14.4 Weld bend test

The test shall be carried out in accordance with EN 910 using a mandrel of a diameter of 4T and with a bending angle of 180º. After testing the test piece shall show no cracks or flaws but slight premature failure at its edges shall not be regarded as a justification for rejection**.**

NOTE This test is only applicable for fittings made from sheet/plate or strip where welding is a part of the production.

14.5 Impact testing

14.5.1 The test shall be carried out in accordance with EN 10045-1 at the temperature agreed in the applicable option.

14.5.2 The mean value of the three test pieces shall meet the specified minimum average value given in Table 5 or 6 for the steel grade concerned. One individual value may be below the specified value, provided that it is not less than 70 % of that value.

14.5.3 If the width (W) of the test piece is less than 10 mm, the measured impact energy (KVp) shall be converted to impact energy (KVc) using the equation:

$$KV\text{c} = 10 \times KV\text{p}/W \qquad (2)$$

where

KVc is the calculated impact energy, in joules;

KVp is the measured impact energy, in joules;

W is the width of the test piece.

The calculated impact energy KVc shall comply with the requirements given in 14.5.2.

14.5.4 If the requirement of 14.5.2 is not met, then an additional set of three test pieces may be taken at the discretion of the manufacturer from the same sample and tested. To consider the test unit as complying, after testing the second test, following conditions shall be satisfied:

— the average value of six test shall be equal to or greater than the specified minimum average value;

— not more than two of six individual values may be lower than the specified minimum average value;

— not more than one of six values may be lower than 70 % of the specified minimum average value.

14.5.5 The measured energy values and the resulting average value shall be reported.

14.6 Intergranular corrosion test

The intergranular corrosion test shall be carried out in accordance with EN ISO 3651-2.

14.7 Dimensional testing

The dimension of the fittings shall conform to the requirement stated in 11.1, 11.2 and 11.3. It is the responsibility of the manufacturer to decide frequency of testing.

14.8 Visual inspection

Fittings shall be visually examined and shall conform to the requirements stated in Clause 10. It is the responsibility of the manufacturer to decide frequency of inspection.

14.9 Non destructive testing

14.9.1 Personnel

Level 1 and 2 personnel and NDT operations shall be authorised by a level 3 individual and approved by the employer and certified in accordance with EN 473.

For pressure equipment in category III, the personnel shall be approved by a third-party organization recognized by a Member State.

14.9.2 NDT of the weld

All weld seams on fittings shall be non-destructively tested either prior to or after forming.

The manufacturer shall demonstrate full traceability to each individual fitting.

Following methods of examination can be used:

— radiographic examination;

— eddy current examination for fittings with wall thickness not greater than 6 mm;

— ultrasonic examination.

Option 19: *Liquid penetrant examinations of welds and weld ends.*

Option 20: *Liquid penetrant examination of surfaces, extent shall be specified at the time of enquiry and order.*

Option 21: *Ultrasonic testing of strip or plates used for the manufacture of fittings, for the detection of laminar imperfections.*

14.10 Material identification

Each fitting shall be tested by an appropriate method to assure that the correct grade is being supplied.

14.11 Optional tests

These tests are carried out if agreed at the time of enquiry and order and in accordance with Table 11.

15 Marking

15.1 Marking to be applied

The marking shall include the following minimum information:

— the manufacturer's mark or trade mark;

— the number of this European Standard: EN 10253-4;

— "A" or "B" for the type of fitting;

— the steel name or number;

— the cast number or a code number which shows the correlation with the inspection document;

— welded (w) or seamless (s) fitting;

— outside diameter D;

— wall thickness T;

— the mark of the inspection representative;

— country of manufacture or the ISO code (in accordance with EN ISO 3166-1) representing it.

NOTE When individual manufacturing/production operations are performed at different locations, country of manufacture means country where the forming operation is performed.

For reducing tees or reducers, the marking shall include D 1 and T_1.

Option 22: *Additional marking and methods of marking, as agreed upon the time of enquiry or order shall be applied.*

Methods of marking may be e.g.:

— ink jet marking;

— electrochemical etching;

— fibro-marking;

— laser marking.

16 Handling and packaging

The fittings are supplied in the normal packaging by the manufacturer and without any protective coating or end plugs.

Option 23: *Special packaging, coating or end plugs as agreed at the time of enquiry or order shall be applied.*

EN 10253-4:2008 (E)

Annex A
(normative)

Structural dimensions of fittings

The structural dimensions of fittings listed in Table A.1, Table A.2, Table A.5 and Table A.7 are based on ISO 5251 and ISO 3419.

Table A.1 — Below is structural dimensions for elbows with bending radius 2D, 3D and 5D listed

DN	*D*	2D			3D			5D
		F	*C*	*B*	*F*	*C*	*B*	*F*
	mm	mm	mm	mm	mm	mm	mm	mm
15	21,3	25	50	36	28	56	38	45
20	26,9	25	50	39	29	58	43	57
25	33,7	28	56	42	38	76	55	72
32	42,4	32	64	53	48	96	69	93
40	48,3	38	76	62	57	114	81	108
50	60,3	51	102	81	76	152	106	135
65	76,1	63	127	102	95	190	133	175
80	88,9	76	152	121	114	228	159	205
100	114,3	102	203	159	152	304	209	270
125	139,7	127	254	197	190	380	260	330
150	168,3	152	305	237	229	458	313	390
200	219,1	203	406	313	305	610	414	510
250	273,0	254	508	391	381	762	518	650
300	323,9	305	610	467	457	914	619	775
350	355,6	356	711	533	533	1066	711	850
400	406,4	406	813	610	610	1220	813	970
450	457,0	457	914	686	686	1372	914	1122
500	508,0	508	1016	762	762	1524	1016	1245
600	610,0	610	1220	914	914	1828	1219	1524
700	711,0	711	1422	1066	1067	2134	1422	1778
800	813,0	813	1626	1220	1219	2438	1625	2033
900	914,0	914	1828	1371	1372	2744	1829	2285
1000	1016,0	1016	2032	1524	1524	3048	2032	2540

EN 10253-4:2008 (E)

Table A.2 — Below is structural dimensions for tees, equal and reduced listed

DN	*D* mm	DN_1	D_1 mm	*F* mm	*G* mm	*DN*	*D* mm	DN_1	D_1 mm	*F* mm	*G* mm
15	21,3	15	21,3	25	-	300	323,9	300	323,9	254	-
20	26,9	20	26,9	29	-			250	273		241
		15	21,3		29			200	219,1		229
25	33,7	25	33,7	38	-			150	168,3		219
		20	26,9		38	350	355,6	350	355,6	279	-
		15	21,3		38			300	323,9		270
32	42,4	32	42,4	48	-			250	273		257
		25	33,7		48			200	219,1		248
		20	26,9		48	400	406,4	400	406,4	305	-
		15	21,3		48			350	355,6		305
40	48,3	40	48,3	57	-			300	323,9		295
		32	42,4		57			250	273		283
		25	33,7		57	450	457	450	457	343	-
		20	26,9		57			400	406,4		330
50	60,3	50	60,3	64	-			350	355,6		330
		40	48,3		60			300	323,9		321
		32	42,4		57	500	508	500	508	381	-
		25	33,7		51			450	457		368
65	76,1	65	76,1	76	-			400	406,4		356
		50	60,3		70			350	355,6		356
		40	48,3		67	600	610	600	610	432	-
		32	42,4		64			500	508		432
80	88,9	80	88,9	86	-			450	457		419
		65	76,1		83			400	406,4		406
		50	60,3		76	700	711	700	711	521	-
		40	48,3		73	800	813	800	813	597	-
100	114,3	100	114,3	105	-	900	914	900	914	673	-
		80	88,9		98	1000	1016	1000	1016	749	-
		65	76,1		95						
		50	60,3		89						
125	139,7	125	139,7	124	-						
		100	114,3		117						
		80	88,9		111						
		65	76,1		108						
150	168,3	150	168,3	143	-						
		125	139,7		137						
		100	114,3		130						
		80	88,9		124						
200	219,1	200	219,1	178	-						
		150	168,3		168						
		125	139,7		162						
		100	114,3		156						
250	273	250	273	216	-						
		200	219,1		203						
		150	168,3		194						
		125	139,7		191						

EN 10253-4:2008 (E)

Table A.3 - Below are the structural dimensions for pulled tees, equal and reduced listed

DN	*D* mm	DN_1	D_1 mm	*F* mm	*h* mm
50	60,3	50	60,3	50	3
		40	48,3		3
		32	42,4		2
		25	33,7		2
65	76,1	65	76,1	65	4
		50	60,3		3
		40	48,3		3
		32	42,4		2
80	88,9	80	88,9	80	5
		65	76,1		4
		50	60,3		3
		40	48,3		3
100	114,3	100	114,3	100	7
		80	88,9		5
		65	76,1		4
		50	60,3		3
125	139,7	125	139,7	125	8
		100	114,3		7
		80	88,9		5
		65	76,1		4
150	168,3	150	168,3	150	10
		125	139,7		8
		100	114,3		7
		80	88,9		5
200	219,1	200	219,1	200	12
		150	168,3		10
		125	139,7		8
		100	114,3		7
250	273	250	273	250	13
		200	219,1		12
		150	168,3		10
		125	139,7		8
300	323,9	300	323,9	300	15
		250	273		13
		200	219,1		12
		150	168,3		10
350	355,6	350	355,6	350	17
		300	323,9		15
		250	273		13
		200	219,1		12
400	406,4	400	406,4	400	20
		350	355,6		15
		300	323,9		13
		250	273		13

EN 10253-4:2008 (E)

Table A.4 – Below are the structural dimensions for branch welded tees, equal and reduced listed

DN	*D* mm	DN_1	D_1 mm	*F* mm	*DN*	*D* mm	DN_1	D_1 mm	*F* mm
50	60,3	50	60,3	125	450	457	450	457	450
		40	48,3				400	406,4	
		32	42,4				350	355,6	
		25	33,7				300	323,9	
65	76,1	65	76,1	140	500	508	500	508	500
		50	60,3				450	457	
		40	48,3				400	406,4	
		32	42,4				350	355,6	
80	88,9	80	88,9	150	600	610	600	610	600
		65	76,1				500	508	
		50	60,3				450	457	
		40	48,3				400	406,4	
100	114,3	100	114,3	160	700	711	700	711	700
		80	88,9				600	610	
		65	76,1				500	508	
		50	60,3				450	457	
125	139,7	125	139,7	180	800	813	800	813	800
		100	114,3				700	711	
		80	88,9				600	610	
		65	76,1				500	508	
150	168,3	150	168,3	200	900	914	900	914	900
		125	139,7				800	813	
		100	114,3				700	711	
		80	88,9				600	610	
200	219,1	200	219,1	250	1000	1016	1000	1016	1000
		150	168,3				900	914	
		125	139,7				800	813	
		100	114,3				700	711	
250	273	250	273	300					
		200	219,1						
		150	168,3						
		125	139,7						
300	323,9	300	323,9	330					
		250	273						
		200	219,1						
		150	168,3						
350	355,6	350	355,6	360					
		300	323,9						
		250	273						
		200	219,1						
400	406,4	400	406,4	400					
		350	355,6						
		300	323,9						
		250	273						

EN 10253-4:2008 (E)

Table A.5 — Below is structural dimensions for reducers, concentric and eccentric listed

DN	*D* mm	DN_1	D_1 mm	*L* mm	*DN*	*D* mm	DN_1	D_1 mm	*L* mm
20	26,9	15	21,3	38	450	457	400	406,4	381
25	33,7	20	26,9	51			350	355,6	
		15	21,3				300	323,9	
32	42,4	25	33,7	51	500	508	450	457	508
		20	26,9				400	406,4	
		15	21,3				350	355,6	
40	48,3	32	42,4	64	600	610	500	508	508
		25	33,7				450	457	
		20	26,9				400	406,4	
50	60,3	40	48,3	76	700	711	600	610	610
		32	42,4				500	508	
		25	33,7				450	457	
65	76,1	50	60,3	89	800	813	700	711	610
		40	48,3				600	610	
		32	42,4				500	508	
80	88,9	65	76,1	89	900	914	800	813	610
		50	60,3				700	711	
		40	48,3				600	610	
100	114,3	80	88,9	102	1000	1016	900	914	610
		65	76,1				800	813	
		50	60,3				700	711	
125	139,7	100	114,3	127					
		80	88,9						
		65	76,1						
150	168,3	125	139,7	140					
		100	114,3						
		80	88,9						
200	219,1	150	168,3	152					
		125	139,7						
		100	114,3						
250	273	200	219,1	178					
		150	168,3						
		125	139,7						
300	323,9	250	273	203					
		200	219,1						
		150	168,3						
350	355,6	300	323,9	330					
		250	273						
		200	219,1						
400	406,4	350	355,6	356					
		300	323,9						
		250	273						

EN 10253-4:2008 (E)

Table A.6 – Below are the structural dimensions for reducers (straight), concentric and eccentric listed

DN	*D* mm	DN_1	D_1 mm	*L* mm	*DN*	*D* mm	DN_1	D_1 mm	*L* mm
15	21,3	10	17,2	12	350	355,6	300	323,9	94
20	26,9	15	21,3	17			250	273	244
		10	17,2	29			200	219,1	404
25	33,7	20	26,9	20			150	168,3	554
		15	21,3	37	400	406,4	350	355,6	150
32	42,4	25	33,7	26			300	323,9	244
		20	26,9	46			250	273	395
40	48,3	32	42,4	17			200	219,1	554
		25	33,7	43	450	457	400	406,4	150
		20	26,9	63			350	355,6	301
50	60,3	40	48,3	36			300	323,9	395
		32	42,4	53			250	273	545
		25	33,7	79	500	508	450	457	150
		20	26,9	99			400	406,4	301
65	76,1	50	60,3	47			350	355,6	451
		40	48,3	82			300	323,9	545
		32	42,4	100	600	610	500	508	301
		25	33,7	126			450	457	451
80	88,9	65	76,1	38			400	406,4	601
		50	60,3	85			350	355,6	752
		40	48,3	120	700	711	600	610	301
		32	42,4	138			500	508	601
100	114,3	80	88,9	75			450	457	752
		65	76,1	113			400	406,4	902
		50	60,3	160	800	813	700	711	301
		40	48,3	195			600	610	601
125	139,7	100	114,3	75			500	508	902
		80	88,9	151			450	457	1053
		65	76,1	188	900	914	800	813	301
		50	60,3	235			700	711	601
150	168,3	125	139,7	85			600	610	902
		100	114,3	160			500	508	1203
		80	88,9	235	1000	1016	900	914	301
		65	76,1	273			800	813	601
200	219,1	150	168,3	150			700	711	902
		125	139,7	235			600	610	1203
		100	114,3	310	1100	1120	1000	1016	308
		80	88,9	385			900	914	609
250	273	200	219,1	160			800	813	909
		150	168,3	310			700	711	1210
		125	139,7	395	1200	1220	1100	1120	296
		100	114,3	470			1000	1016	604
300	323,9	250	273	151			900	914	905
		200	219,1	310			800	813	1205
		150	168,3	461					
		125	139,7	545					

Table A.7 — Below is structural dimensions for caps listed

DN	*D* mm	*K* mm
15	21,3	25,0
20	26,9	25,0
25	33,7	38,0
32	42,4	38,0
40	48,3	38,0
50	60,3	38,0
65	76,1	38,0
80	88,9	51,0
100	114,3	64,0
125	139,7	76,0
150	168,3	89,0
200	219,1	102,0
250	273,0	127,0
300	323,9	152,0
350	355,6	165,0
400	406,4	178,0
450	457,0	203,0
500	508,0	229,0
600	610,0	267,0
700	711,0	267,0
800	813,0	267,0
900	914,0	267,0
1000	1016,0	305,0

EN 10253-4:2008 (E)

Annex B
(normative)

Determination of pressure factors and wall thickness

B.1 General

Annex B defines pressure factors for fittings of type A and wall thickness requirements of fittings of type B. This is done by laying down appropriate calculation procedures in detail.

The pressure factor of a fitting of type A gives the percentage of internal pressure which may, in general, be applied to the fitting relative to the pressure which may be applied to a straight pipe with the same dimensions (diameter, wall thickness, wall thickness tolerance) and material. The wall thickness tolerance of this pipe is assumed to be the same as the wall thickness tolerances at the welding ends of the fitting.

The wall thicknesses of fittings type B are laid down so that the fittings will, in general, withstand the same internal pressure as a straight pipe with the same dimensions (diameter, wall thickness, wall thickness tolerance) and material. Wall thickness tolerance of this corresponding straight pipe is assumed to be the same as the wall thickness tolerances at the welding ends of the fitting.

NOTE The calculation procedures are based on the design rules laid down in EN 13480-3:2002. Most of the formulas may be applied in case of time-independent and time-dependent loads. Where the formulas are valid only for time-independent loads appropriate notes are made in Annex B.

B.2 Symbols and units

For the purposes of Annex B, C and D, the symbols given in Table B.1 shall apply in addition to those given in Clause 4. Dimensions are in millimetres.

Table B.1 — Additional symbols for the purposes of Annexes B, C and D

Symbol	Description
A_f	Stress loaded cross sectional area (calculation of tees)
A_{fs}, A_{fsc}, A_{fbc}, A_{fb}	Partial Areas of A_f (calculation of tees)
A_p	Pressure loaded area (calculation of tees)
A_{pbc}, A_{psc}	Areas used in the determination of A_p (calculation of tees)
c_0	Corrosion or erosion allowance
D_b	Outside diameter at the body of the branch of tees type B
D_s	Outside diameter at the body of the run of tees type B
L_2	Length at the major end of reducers
L'_2	Length of cylindrical part at the major end of reducers
$L_{2,min}$	Minimum length at the major end of reducers
$L'_{2,min}$	Minimum length of cylindrical part at the major end of reducers
L_4	Length at the minor end of reducers
$L_{4,min}$	Minimum length at the minor end of reducers
l_b	Reinforcing length of branch (calculation of tees)
l'_b	Modified reinforcing length of branch (calculation of tees)
l_s	Reinforcing length of run (calculation of tees)

EN 10253-4:2008 (E)

Symbol	Description
l'_s	Modified reinforcing length of run (calculation of tees)
r	Bending radius of elbows and return bends relating to the internal diameter
r_c	Crotch radius of tees
$T_{1,min}$	Minimum wall thickness at the minor welding end of reducers and at the welding end of the branch of reducing tees (D_1) Minimum wall thickness of the branch of reducing tees type A Minimum wall thickness of the cylindrical part at the minor end of reducers type A
$T_{1,X}$	Wall thickness of a straight pipe with the same resistance to pressure as a fitting type A (equivalent wall thickness) with the diameter D_1 (minor end of a reducer)
T_2	Wall thickness of the cylindrical part of reducers type B at their major end
$T_{2,min}$	Minimum wall thickness of the cylindrical part of reducers type B at their major end
$T'_{2,min}$	Minimum wall thickness of a cylindrical part with modified length of reducers type B at their major end
T_3	Wall thickness of the conical part of reducers type B
$T_{3,min}$	Minimum wall thickness of the conical part of reducers type B
T_4	Wall thickness of the cylindrical part of reducers type B at their minor end
$T_{4,min}$	Minimum wall thickness of the cylindrical part of reducers type B at their minor end
$T'_{4,min}$	Minimum wall thickness of a cylindrical part with modified length of reducers type B at their minor end
T_b	Wall thickness on the branch of tees type B
$T_{b,min}$	Minimum wall thickness on the branch of tees type B
$T_{bc,min}$	Intermediate result (calculation of tees)
T_c	Wall thickness of caps type B
$T_{c,min}$	Minimum wall thickness of caps type B Minimum wall thickness on the crotch zone of tees
$T_{co,min}$	Intermediate result (calculation of reducers type B)
T_{ext}	Wall thickness on the extrados of elbows type B
$T_{ext,min}$	Minimum wall thickness on the extrados of elbows type B
T_{int}	Wall thickness on the intrados of elbows type B
$T_{int,min}$	Minimum wall thickness on the intrados of elbows type B
$T_{j,min}$	Intermediate result (calculation of reducers type B)
$T_{kn\ y,min}$	Intermediate result (calculation of caps type B)
$T_{kn\ b,min}$	Intermediate result (calculation of caps type B)
T_{min}	Minimum wall thickness at the welding ends of elbows, return bends, caps and equal tees, at the welding ends of the run of reducing tees or at the major welding end of reducers Minimum wall thickness at the body of elbows, return bends, equal tees and caps of type A Minimum wall thickness of the run of reducing tees type A Minimum wall thickness of the cylindrical part at the major end of reducers type A and of the conical part of reducers type A
T_s	Wall thickness at the run of tees type B
$T_{s,min}$	Minimum wall thickness at the run of tees type B Intermediate result (calculation of caps type B)
$T_{sc,min}$	Intermediate result (calculation of tees)
T_X	Wall thickness of a straight pipe with the same pressure resistance as a fitting of type A (equivalent wall thickness)
$T_{X,23}$, $T_{X,3}$, $T_{X,34}$, $T_{X,4}$, T'_{L2}, T_{L2}, T'_{L4}, T_{L4},	Intermediate results (calculation of reducers type A)

EN 10253-4:2008 (E)

Symbol	Description
$T_{X,s}$, $T_{X,kn\,y}$, $T_{X,kn\,b}$	Intermediate results (calculation of caps type A)
$T_{\alpha,min}$	Minimum wall thickness at the body of elbows type B (between intrados and the crown)
X	Pressure factor: ratio of the pressure a fitting of type A will resist to the pressure a straight pipe (with same dimensions and material) will resist
α	Semi angle of reducer Angle at the perimeter of elbows (for the evaluation of the wall thickness at the body of the elbow)
α_b, α_s	Angle (intermediate result in the calculation of tees)
β, $\beta_{0.06}$, $\beta_{0.1}$, $\beta_{0.2}$, N, W, Y, Z	Factors (calculation of caps)
β, β_H, s, τ	Factors (calculation of reducers)

B.3 Minimal and nominal wall thickness

The design rules given in EN 13480-3:2002 are based on minimal required wall thicknesses. Therefore, in a first step, these minimal wall thicknesses have to be derived from the nominal wall thickness of the fitting. Taking into account the negative tolerances given in Table 9 and the corrosion or erosion allowance c_0 the minimal wall thickness is calculated:

$$T_{min} = \begin{cases} T \cdot (100 - 12.5)/100 - c_0 & if\ D \le 610\ mm \\ T - 0.35\ mm - c_0 & if\ D > 610\ mm\ \ and\ T \le 10\ mm \\ T - 0.5\ mm - c_0 & if\ D > 610\ mm\ \ and\ T > 10\ mm \end{cases} \quad \text{(B.1)}$$

To obtain a wall thickness including wall thickness tolerances and corrosion or erosion allowance from a minimal wall thickness the following equation is used:

$$T = \begin{cases} (T_{min} + c_0) \cdot 100/(100 - 12.5) & if\ D \le 610\ mm \\ T_{min} + c_0 + 0.35\ mm & if\ D > 610\ mm\ \ and\ T_{min} + c_0 \le 9{,}65\ mm \\ T_{min} + c_0 + 0.5\ mm & if\ D > 610\ mm\ \ and\ T_{min} + c_0 > 9{,}65\ mm \end{cases} \quad \text{(B.2)}$$

If other tolerances are specified for the fitting, these values have to be used in above formulas.

For fittings of type B the corrosion or erosion allowance c_0 shall be 0.

NOTE In general, $c_0 = 0$ has the consequence that elbows, tees and reducers will withstand at least the same pressure as the corresponding straight pipe for all corrosion or erosion allowances.

B.4 Pressure factors of fittings of type A

B.4.1 General

The formulas are based on the outside diameters of the fittings. They may be used for fittings designated by their internal diameter by setting $D = ID + 2\,T$.

B.4.2 Pressure factor

In general, fittings of type A will not withstand the same internal pressure as a straight pipe with the same dimensions (diameter, wall thickness, wall thickness tolerance) and material. To support the designer of a piping system a pressure factor X is calculated. This pressure factor X giving the ratio of the pressure the fitting will resist to the pressure the pipe will resist:

$$X = \frac{pressure\ resis\tan ce\ of\ \ fitting}{pressure\ resis\tan ce\ of\ \ pipe} \cdot 100\% \qquad \text{(B.3)}$$

In many cases the design formulas for fittings are based on the wall thickness of a straight pipe. Therefore, in a first step, the wall thickness T_X of a pipe with the same outside diameter, which will resist to the same pressure as the given fitting, (equivalent wall thickness) will be determined. The pressure factor X is calculated afterwards:

$$X = \frac{\frac{T_X}{D}}{\frac{T_{\min}}{D}} \cdot \frac{1 - \frac{T_{\min}}{D}}{1 - \frac{T_X}{D}} \cdot 100\% \qquad \text{(B.4)}$$

NOTE Formula (B.4) is derived from (6.1-1) from EN 13480-3:2002.

For fittings with two different ends (reducers and reducing tees) the pressure factor shall be calculated:

$$X = \frac{\frac{T_X}{D}}{\min\left(\frac{T_{\min}}{D}, \frac{T_{1,\min}}{D_1}\right)} \cdot \frac{1 - \min\left(\frac{T_{\min}}{D}, \frac{T_{1,\min}}{D_1}\right)}{1 - \frac{T_X}{D}} \cdot 100\% \qquad \text{(B.5)}$$

B.4.3 Elbows

For elbows, the equivalent wall thickness is given by:

$$T_X = \frac{4 \cdot R - 2 \cdot D + 2 \cdot T_{\min}}{4 \cdot R - D} \cdot T_{\min} \qquad \text{(B.6)}$$

NOTE Formula (B.6) is derived from (B.4.1-11) from EN 13480-3:2002 by setting $B = e_i/e$ and solving the equation for e.

Example:

Pressure factor of an elbow model 2D - 711 x 7.1 (R = 711 mm), corrosion or erosion allowance 1 mm:

(B.1): $T_{\min}$ = 7,1 mm – 0,35 mm – 1 mm= 5,75 mm

(B.6): T_X = 3.864 mm

(B.4): X = 67,0 %

EN 10253-4:2008 (E)

B.4.4 Tees

The calculation procedure for tees is based on the design rules in EN 13480-3:2002. It includes the determination of the stress loaded cross sectional area A_f and the pressure loaded cross sectional area A_p, which are shown in Figure B.1.

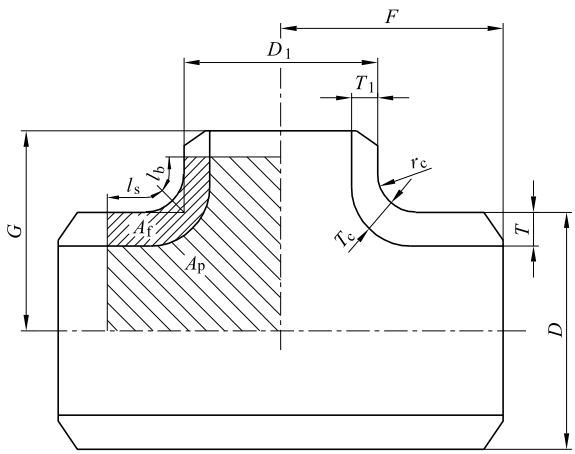

Figure B.1 — Tee type A

With these areas A_p and A_f the wall thickness of a pipe with the same resistance to internal pressure as the tee is given by:

$$T_X = \frac{D}{2 \cdot \left(\frac{A_p}{A_f} + 1 \right)} \tag{B.7}$$

The reinforcing lengths are calculated:

$$l_s = \min\left(\sqrt{(D - T_{\min}) \cdot T_{\min}},\ F - \frac{D_1}{2} - \left(1 - \frac{\pi}{4}\right) \cdot r_c \right) \tag{B.8}$$

$$l_b = \min\left(\sqrt{(D_1 - T_{1,\min}) \cdot T_{1,\min}},\ G - \frac{D}{2} - \left(1 - \frac{\pi}{4}\right) \cdot r_c \right) \tag{B.9}$$

At the transition of run and branch (crotch zone) the inside and outside surfaces shall merge smoothly.

NOTE 1 Formula (B.7) is only applicable if $T_{1,\min}$ is less equal $T_{\min}$.

NOTE 2 Formula (B.7) is derived from (8.4.3-3) and (6.1-1) from EN 13480-3:2002,
Formulas (B.8) and (B.9) are based on (8.4.1-2) and (8.4.3-1) from EN 13480-3:2002.
The requirement $T_{1,\min} \leq T_{\min}$ is more restrictive than the stipulation in EN 13480-3:2002, Figure 8.3.1-1.

NOTE 3 In EN 13480-3:2002 the design is limited to $D_1 - 2 \cdot T_{1,\min} \leq D - 2 \cdot T_{\min}$ for austenitic steels and to $D_1 - 2 \cdot T_{1,\min} \leq 0{,}8\ (D - 2 \cdot T_{\min})$ for materials others than austenitic steels. For applications within the creep range it is limited to $D_1 - 2 \cdot T_{1,\min} \leq 0{,}7\ (D - 2 \cdot T_{\min})$ and the pressure factor should be multiplied by 0,9.

Example:

Pressure factor of a reducing tee 813 x 8 – 508 x 6.3,
c_0 = 0 mm, F = 597 mm, G = 533 mm , r_c = 95 mm and $T_{c,min}$ = ($T_{s,min}$ + $T_{b,min}$) / 2:

(B.1): T_{min} = 8 mm – 0,35 mm – 0 mm = 7,650 mm
$T_{1,min}$ = 6,3 mm (100 – 12,5) / 100 – 0 mm = 5,513 mm

$T_{c,min}$ = (7,65 mm + 5,513 mm) / 2 = 6,581 mm

(B.8): l_s = 78,49 mm

(B.9): l_b = 52,63 mm

For the calculation of areas A_f and A_p see Figure B.2.

$$\alpha_s = 45° \cdot \max\left(1 - \frac{l_s}{\frac{\pi}{4} \cdot r_c}, 0\right) = 0.00°$$

$$\alpha_b = 45° \cdot \max\left(1 - \frac{l_b}{\frac{\pi}{4} \cdot r_c}, 0\right) = 13.26°$$

$$l'_s = r_c - r_c \cdot \sin(\alpha_s) + \max\left(l_s - r_c \cdot \frac{\pi}{4}, 0\right) = 98.88\ mm$$

$$l'_b = r_c - r_c \cdot \sin(\alpha_s) + \max\left(l_b - r_c \cdot \frac{\pi}{4}, 0\right) = 73.21\ mm$$

$$T_{sc,\min} = \frac{45° - \alpha_s}{45°} \cdot T_{\min} + \frac{\alpha_s}{45°} \cdot T_{c,\min} = 7.650\ mm$$

$$T_{bc,\min} = \frac{45° - \alpha_b}{45°} \cdot T_{1,\min} + \frac{\alpha_b}{45°} \cdot T_{c,\min} = 5.827\ mm$$

$$A_{fs} = \max(l'_s - r_c, 0) \cdot T_{\min} = 29.7\ mm^2$$

$$A_{fsc} = \left(\left(r_c + \frac{T_{sc,\min} + T_{c,\min}}{2}\right)^2 - r_c^2\right) \cdot \pi \cdot \frac{45° - \alpha_s}{360°} + T_{sc,\min}^2 \cdot \frac{\tan(\alpha_s)}{2} = 550.8\ mm^2$$

$$A_{fbc} = \left(\left(r_c + \frac{T_{bc,\min} + T_{c,\min}}{2}\right)^2 - r_c^2\right) \cdot \pi \cdot \frac{45° - \alpha_b}{360°} + T_{bc,\min}^2 \cdot \frac{\tan(\alpha_b)}{2} = 341.2\ mm^2$$

$$A_{fb} = \max(l'_b - r_c, 0) \cdot T_{1,\min} = 0.0\ mm^2$$

$$A_f = A_{fs} + A_{fsc} + A_{Fbc} + A_{fb} = 921.7\ mm^2$$

$$A_{psc} = r_c^2 \cdot \left(\frac{1}{2} \cdot (1 - \sin(\alpha_s))^2 - \pi \cdot \frac{45° - \alpha_s}{360°} + \frac{1}{2} \cdot \sin(\alpha_s) \cdot (\cos(\alpha_s) - \sin(\alpha_s))\right) = 968\ mm^2$$

$$A_{pbc} = r_c^2 \cdot \left(\frac{1}{2} \cdot (1 - \sin(\alpha_b))^2 - \pi \cdot \frac{45° - \alpha_b}{360°} + \frac{1}{2} \cdot \sin(\alpha_b) \cdot (\cos(\alpha_b) - \sin(\alpha_b))\right) = 950\ mm^2$$

$$A_p = \left(\frac{D1}{2} + l'_s\right) \cdot \left(\frac{D}{2} + l'_b\right) - l'_s \cdot l'_b + A_{psc} + A_{psb} - A_f = 163038\ \text{mm}^2$$

$$\frac{A_p}{A_f} = 176.89$$

(B.7): T_X = 2,285 mm

(B.5): X = 29,7 %

EN 10253-4:2008 (E)

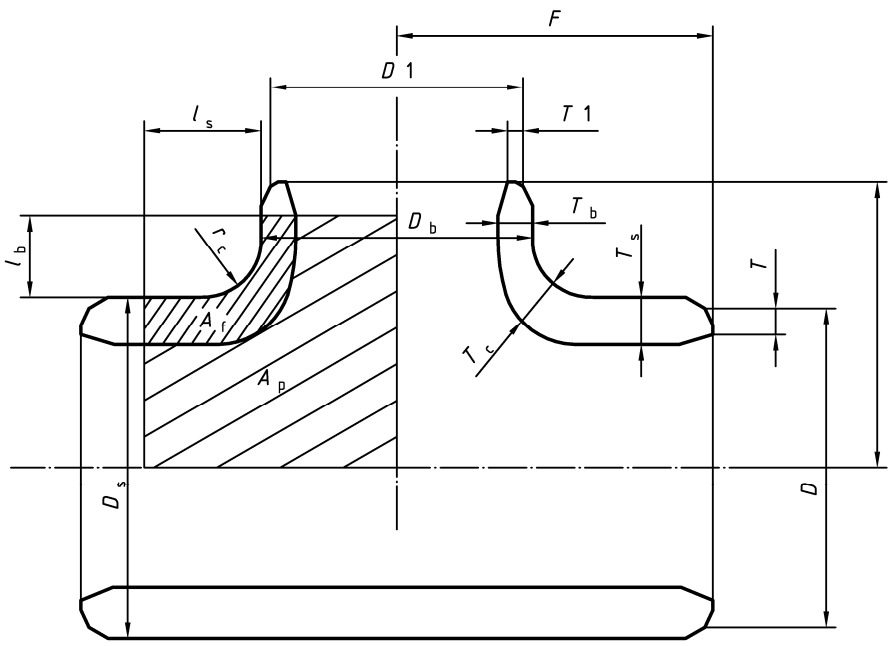

Figure B.2 — Additional dimensions and areas used in the calculation A_p and A_f of a tee

B.4.5 Reducers

For the determination of the pressure resistance of reducers several aspects have to be taken into consideration. The calculations are based on the following preconditions:

— The wall thickness in the conical section is at least the wall thickness at the major end of the reducer;

— The reducer has cylindrical sections on both ends of the reducer. In some cases minimal lengths of these sections are required;

— At the transition of cylindrical sections and conical sections the inside and outside surfaces shall merge smoothly;

— The transition between the cylindrical sections and the conical section at the major end may be curved. In this case the distance between the knuckle and the end of the reducer shall be at least:

$$L'_{2,\min} = 0.5 \cdot \sqrt{(D - T_{L2}) \cdot T_{L2}} \qquad \text{(B.10)}$$

— The transition between the cylindrical sections and the conical section at the minor end may be curved too. The wall thickness of the knuckle shall be the same as of the conical section.

Figure B.3 shows wall thicknesses, minimal lengths at the ends and the semi angle for both concentric and eccentric reducers.

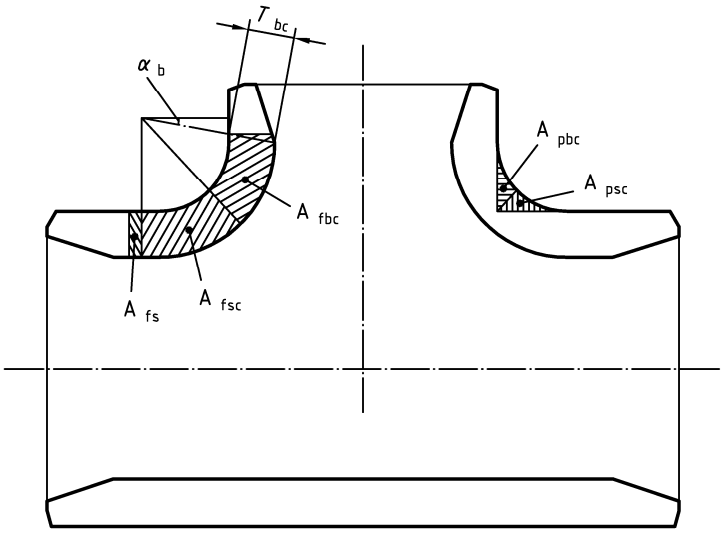

Figure B.3 — Concentric and eccentric reducer type A

The design of a reducer comprises the determination of the wall thickness at the cylindrical sections, the wall thickness at the conical section and the wall thicknesses at the transitions between cylindrical and conical sections. Therefore, first the equivalent wall thickness at different sections of the reducer have to be calculated. In the next step the overall equivalent wall thickness of the reducer is determined.

$$T_{X,23} = T_{\min} \cdot \frac{D}{\beta \cdot (D - T_{\min}) + T_{\min}} \tag{B.11}$$

$$T_{X,3} = T_{\min} \cdot \cos(\alpha) \cdot \frac{D}{D - 2 \cdot T_{\min} - \sqrt{\frac{(D - T_{\min}) \cdot T_{\min}}{\cos(\alpha)}} \cdot \sin(\alpha) + T_{\min} \cdot \cos(\alpha)} \tag{B.12}$$

$$T_{X,34} = T_{\min} \cdot \frac{D}{\beta_H \cdot (D_1 - T_{1,\min}) \cdot \frac{T_{\min}}{T_{1,\min}} + T_{\min}} \tag{B.13}$$

$$T_{X,4} = T_{1,\min} \cdot \frac{D}{D_1} \tag{B.14}$$

$$T_X = \min(T_{X,23},\ T_{X,3},\ T_{X,34},\ T_{X,4}) \tag{B.15}$$

$$T_{1,X} = T_X \cdot \frac{D_1}{D} \tag{B.16}$$

with the factors β and β_H:

$$\beta = \max\left(\frac{1}{3} \cdot \sqrt{\frac{D - T_{\min}}{T_{\min}}} \cdot \frac{\tan(\alpha)}{1 + \frac{1}{\sqrt{\cos(\alpha)}}} - 0.15,\ 1 \right) \tag{B.17}$$

EN 10253-4:2008 (E)

$$s = \frac{T_{\min}}{T_{1,\min}} \tag{B.18}$$

$$\tau = \begin{cases} s \cdot \sqrt{\frac{s}{\cos(\alpha)}} + \sqrt{\frac{1+s^2}{2}} & if\ s < 1 \\ 1 + \sqrt{s \cdot \frac{1+s^2}{2 \cdot \cos(\alpha)}} & if\ s \geq 1 \end{cases} \tag{B.19}$$

$$\beta_H = 0.4 \cdot \sqrt{\frac{D_1 - T_{1,\min}}{T_{1,\min}}} \cdot \frac{\tan(\alpha)}{\tau} + 0.5 \tag{B.20}$$

Afterwards, the minimal lengths at the ends have to be calculated. In a first step, the wall thicknesses T_{L2} and T_{L4} are determined. These wall thicknesses are required at the cylindrical sections so that the reducer is able to resist the pressure expressed by the pressure factor X. The following equations have to be solved by iteration:

$$T'_{L2} = \beta \cdot T_X \cdot \frac{D}{D + (\beta - 1) \cdot T_X} \tag{B.21}$$

$$T_{L2} = \max(T_X,\ T'_{L2}) \tag{B.22}$$

$$T'_{L4} = \beta_H \cdot T_{1,X} \cdot \frac{D}{D + (\beta_H - 1) \cdot T_X} \tag{B.23}$$

$$T_{L4} = \max(T_{1,X},\ T'_{L4}) \tag{B.24}$$

with the factors β and β_H:

$$\beta = \frac{1}{3} \cdot \sqrt{\frac{D - T'_{L2}}{T'_{L2}}} \cdot \frac{\tan(\alpha)}{1 + \frac{1}{\sqrt{\cos(\alpha)}}} - 0.15 \tag{B.25}$$

$$s = \frac{T_{\min}}{T'_{L4}} \tag{B.26}$$

$$\tau = \begin{cases} s \cdot \sqrt{\frac{s}{\cos(\alpha)}} + \sqrt{\frac{1+s^2}{2}} & if\ s < 1 \\ 1 + \sqrt{s \cdot \frac{1+s^2}{2 \cdot \cos(\alpha)}} & if\ s \geq 1 \end{cases} \tag{B.27}$$

$$\beta_H = 0.4 \cdot \sqrt{\frac{D_1 - T'_{L4}}{T'_{L4}}} \cdot \frac{\tan(\alpha)}{\tau} + 0.5 \tag{B.28}$$

With these wall thicknesses the minimal lengths are calculated:

$$L_{2,\min} = \frac{T_{L2} - T_X}{T_{\min} - T_X} \cdot 1.4 \cdot \sqrt{(D - T_{L2}) \cdot T_{L2}} \tag{B.29}$$

$$L_{4,\min} = \frac{T_{L4} - T_{1,X}}{T_{1,\min} - T_{1,X}} \cdot \sqrt{(D_1 - T_{L4}) \cdot T_{L4}} \qquad \text{(B.30)}$$

The length $L_{2,\min}$ is applicable only if T_X is less than $T_{\min}$, $L_{4,\min}$ is applicable if $T_{1,X}$ is less than $T_{1,\min}$. If the reducer is located between pipes with minimal wall thicknesses larger than T_{L2} and T_{L4}, respectively, the minimal lengths do not apply, too.

The calculation procedure described may be used for straight reducers provided the circumflex welds at the ends of the reducers shall be subject to 100% non-destructive examination, either by radiography or ultrasonic techniques, and the reducer is located between pipes with minimal wall thicknesses of at least T_{L2} and T_{L4}, respectively. If no non-destructive examination of the welds is done, the pressure factor shall be multiplied by 0.7.

NOTE 1 Formula (B.12) to (B.28) are applicable only for semi angle α less equal 75° and ratios of $T_{\min} \cos(\alpha)$ to D not smaller than 0,001.

NOTE 2 The calculation of reducers is based on the following sections/equations in EN 13480-3:2002:
Formula (B.10) is based on the stipulations in 6.4.7.2,
Formula (B.11) takes into account 6.4.6.3 a) and 6.4.6.3 g),
Formula (B.12) takes into account 6.4.6.3 b) and 6.4.6.3e),
Formula (B.13) takes into account 6.4.8.3,
Formula (B.14) takes into account the pressure resistance of the cylindrical part at the minor end.
Formulas (B.17) and (B.25) are based on (6.4.6-1),
Formulas (B.18) and (B.26) are given as (6.4.8-1),
Formulas (B.19) and (B.27) are based on (6.4.8-2) and (6.4.8-3),
Formulas (B.20) and (B.28) are given as (6.4.8-4),
Formula (B.21) is derived from (6.4.6-2) and (6.1-1),
Formula (B.23) is derived from (6.4.8-6) and (6.1-1).

The calculation of the minimal length at the ends of the reducers (B.29) and (B.30) takes into account that the wall thickness near the junction may be increased and the wall thickness further away may be reduced provided that the cross-sectional area remains constant (see last paragraph of 6.4.6.2 and last paragraph of 6.4.8.2 of in EN 13480-3:2002) and that the reducer will be located between pipes with minimal wall thicknesses of at least T_X and $T_{1,X}$.

No additional calculation of the wall thickness of the knuckle at the major end is required. The formulas in EN 13480-3:2002 (6.4.7-1) to (6.4.7-4) give wall thicknesses which are not larger than for junctions without a knuckle.

The rules for a knuckle at the minor end differs from the stipulations in EN 13480-3:2002.

The stipulations for straight reducers are based on EN 13480-3:2002 6.4.6.1 2).

Example:

Pressure factor of a concentric reducer 323,9 x 7,1 – 168,3 x 4,5,
c_0 = 0 mm, semi angle α = 35°:

Table A.5: L = 203 mm.

(B.1): $T_{\min}$ = 7,1 mm (100 – 12,5) / 100 – 0 mm = 6,213 mm
$T_{1,\min}$ = 4,5 mm (100 – 12,5) / 100 – 0 mm = 3,938 mm

(B.17): β = 1,000

(B.18): s = 1,578

(B.19): τ = 2,833

(B.20): β_H = 1,139

(B.11): $T_{X,23}$ = 6,213 mm

(B.12): $T_{X,3}$ = 5,715 mm

(B.13): $T_{X,34}$ = 6,674 mm

(B.14): $T_{X,4}$ = 7,578 mm

(B.15): T_X = 5,715 mm

(B.16): $T_{1,X}$ = 2,970 mm

(B.5): X = 91,9 %

The calculation of the minimal lengths at the ends of the cylinders:

Result of solving (B.21) and (B.25) by iteration: T_{L2} = 4,499 mm, β = 0,784

Result of solving (B.23) with (B.26), (B.27) and (B.28) by iteration: T_{L4} = 3,261 mm, s = 1,905, τ = 3,320, β_H = 1,100

EN 10253-4:2008 (E)

(B.22): T_{L2} = 5,715 mm
(B.24): T_{L4} = 3,261 mm
(B.29): $L_{2,\min}$ = 0,00 mm (no specific length required)
(B.10): $L_{2,\min}$ = 21,32 mm
(B.30): $L_{4,\min}$ = 6,99 mm

B.4.6 Caps

The design of a cap comprises the determination of the wall thickness of the spherical end, the wall thickness of the knuckle and the wall thickness of the cylindrical part. Therefore, first the equivalent wall thickness at different sections of the cap has to be calculated. In the next step the overall equivalent wall thickness of the cap is determined:

$$T_{X,s} = T_{\min} \cdot \frac{D}{R1 + 1.5 \cdot T_{\min}} \tag{B.31}$$

$$T_{X,kny} = T_{\min} \cdot \frac{D}{2 \cdot \beta \cdot (0.75 \cdot R1 + 0.2 \cdot (D - 2 \cdot T_{\min})) + T_{\min}} \tag{B.32}$$

$$T_{X,knb} = \frac{D}{\frac{2}{111} \cdot \left(\frac{0.75 \cdot R1 + 0.2 \cdot (D - 2 \cdot T_{\min})}{T_{\min}} \right)^{1.5} \cdot \left(\frac{D - 2 \cdot T_{\min}}{r} \right)^{0.825} + 1} \tag{B.33}$$

$$T_X = \min\left(T_{X,s},\ T_{X,kny}\ \ T_{X,knb},\ T_{\min}\right) \tag{B.34}$$

The factors β is calculated:

$$Y = \min\left(\frac{T_{\min}}{R1},\ 0.04 \right) \tag{B.35}$$

$$Z = \log\left(\frac{1}{Y} \right) \tag{B.36}$$

$$W = \frac{r}{D - 2 \cdot T_{\min}} \tag{B.37}$$

$$N = 1.006 - \frac{1}{6.2 + (90 \cdot Y)^4} \tag{B.38}$$

$$\beta_{0.06} = \left(-0.3635 \cdot Z^3 + 2.2124 \cdot Z^2 - 3.2937 \cdot Z + 1.8873\right) \cdot N \tag{B.39}$$

$$\beta_{0.1} = \left(-0.1833 \cdot Z^3 + 1.0383 \cdot Z^2 - 1.2943 \cdot Z + 0.837\right) \cdot N \tag{B.40}$$

$$\beta_{0.2} = 0.5 \tag{B.41}$$

$$\beta = \begin{cases} 25 \cdot ((0.1 - W) \cdot \beta_{0.06} + (W - 0.06) \cdot \beta_{0.1}) & \text{if } 0.06 \le W \le 0.1 \\ 10 \cdot ((0.2 - W) \cdot \beta_{0.1} + (W - 0.1) \cdot \beta_{0.2}) & \text{if } 0.1 < W \le 0.2 \end{cases} \tag{B.42}$$

NOTE 1 Formulas (B.31) to (B.42) are applicable provided that the following conditions are simultaneously fulfilled:
$r \ge 0{,}06\ (D - 2\ T_{\min})$

$r \geq 3\ T_{min}$
$0{,}001\ (D - 2\ T_{min}) < T_{min} \leq 0{,}08\ (D - 2\ T_{min})$
$R1 \leq D$

NOTE 2 Where $T_{min} > 0{,}004\ (D - 2\ T_{min})$, it is not necessary to calculate (B.33) $T_{X,kn\ b}$

NOTE 3 The calculation of caps is based on the following formulas in EN 13480-3:2002:
Formula (B.31) is derived from (7.1.3-1) and (6.1-1),
Formula (B.32) is derived from (7.1.3-2) and (6.1-1),
Formula (B.33) is derived from (7.1.3-3) and (6.1-1),
Formula (B.35) is given as (7.1.5-1)
Formula (B.36) is given as (7.1.5-2)
Formula (B.37) is given as (7.1.5-3)
Formula (B.38) is given as (7.1.5-4)
Formula (B.39) is given as (7.1.5-6)
Formula (B.40) is given as (7.1.5-5)
Formula (B.41) is read from Figure 7.1.5-1,
Formula (B.42) is given as (7.1.5-8) and (7.1.5-7).

Example:

Pressure factor of a cap 1219 x 10,
c_0 = 0 mm, $r = 0{,}15 \cdot D$, $R1 = 0{,}8 \cdot D$:

r = 0,15 1219 = 183 mm

$R1$ = 0,8 1219 = 975 mm

(B.1): T_{min} = 10 mm – 0,35 mm – 0 mm = 9,65 mm

(B.31): $T_{X,s}$ = 11,886 mm

(B.35): Y = 0,00990

(B.36): Z = 2,005

(B.37): W = 0,152

(B.38): N = 0,860

(B.39): $\beta_{0.06}$ = 1,072

(B.40): $\beta_{0.1}$ = 0,806

(B.42): β = 0,646

(B.32): $T_{X,kn\ y}$ = 9,304 mm

(B.33): $T_{X,kn\ b}$ = 14,028 mm

(B.34): T_X = 9,304 mm

(B.4): X = 96,4 %

B.5 Wall thicknesses of fittings of type B

B.5.1 General

The formulas hereafter are applicable for fittings designated by their outside diameter having the reinforcement to the internal. In general, they are not applicable for fittings designated by their internal diameter having the reinforcement to the external. The calculation for tees explicitly takes into account the diameters at the body of the tee D_s and D_b and may therefore be used for fittings designated by their inside diameter, too.

EN 10253-4:2008 (E)

B.5.2 Elbows

Wall thicknesses and other dimension of an elbow type B are illustrated in Figure B.4.

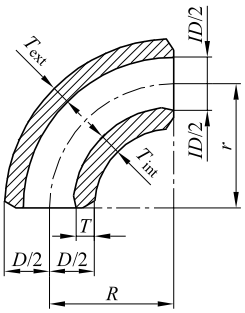

Figure B.4 — Elbow type B

The wall thickness on the intrados of the elbow shall be calculated:

$$T_{\text{int,min}} = T_{\min} \cdot \left(\frac{D}{2 \cdot T_{\min}} + \frac{r}{T_{\min}} - \left(\frac{D}{2 \cdot T_{\min}} + \frac{r}{T_{\min}} - 1 \right) \cdot \sqrt{\frac{\left(\frac{r}{T_{\min}}\right)^2 - \left(\frac{D}{2 \cdot T_{\min}}\right)^2}{\left(\frac{r}{T_{\min}}\right)^2 - \frac{D}{2 \cdot T_{\min}} \cdot \left(\frac{D}{2 \cdot T_{\min}} - 1\right)}} \right) \tag{B.43}$$

where

$$\frac{r}{T_{\min}} = \sqrt{\frac{1}{2} \cdot \left\{ \left(\frac{D}{2 \cdot T_{\min}}\right)^2 + \left(\frac{R}{T_{\min}}\right)^2 \right\} + \sqrt{\frac{1}{4} \cdot \left(\left(\frac{D}{2 \cdot T_{\min}}\right)^2 + \left(\frac{R}{T_{\min}}\right)^2 \right)^2 - \frac{D}{2 \cdot T_{\min}} \cdot \left(\frac{D}{2 \cdot T_{\min}} - 1 \right) \cdot \left(\frac{R}{T_{\min}}\right)^2}} \tag{B.44}$$

The wall thickness on the extrados of an elbow shall be equal to the wall thickness of the corresponding straight pipe:

$$T_{ext,\min} = T_{\min} \tag{B.45}$$

Between intrados (α = 0°) and crown (α = 90°) of the elbow the wall thickness shall be:

$$T_{\alpha,\min} = T_{\min} + \left(T_{\text{int,min}} - T_{\min}\right) \cdot \cos(\alpha) \tag{B.46}$$

Between the crown of the elbow (α = 90°) and extrados (α = 180°) the wall thickness shall be $T_{\min}$.

NOTE 1 Setting Text,min = $T_{\min}$ ensures that the design requirements of EN 13480-3 are met for all corrosion or erosion allowances.

NOTE 2 Formulas (B.43) and (B.44) are given in EN 13480-3:2002 as (B.4.1-3) and (B.4.1-4).

Example:

Wall thicknesses of an elbow model 2D - 711 x 7,1 (R = 711 mm).

(B.1): $T_{\min}$ = 7,1 mm – 0,35 mm = 6,75 mm

(B.44): $r / T_{\min}$ = 105,66

(B.43): $T_{\text{int,min}}$ = 10,067 mm

(B.45): $T_{ext,min}$ = 6,75 mm

Wall thicknesses including tolerances are:

(B.2): T_{int} = 10,07 mm + 0,5 mm = 10,57 mm,
T_{ext} = 6,75 + 0,35 mm = 7,1 mm

B.5.3 Tees

The wall thickness of tees cannot be calculated directly, but shall be assumed in a first step. This assumption shall then be verified by means of the described method. This method leads to a relation between the pressure loaded area A_p and the stress loaded cross section area A_f shown in Figure B.5. Under certain circumstances, the calculation may need to be repeated using an improved assumption of the wall thickness.

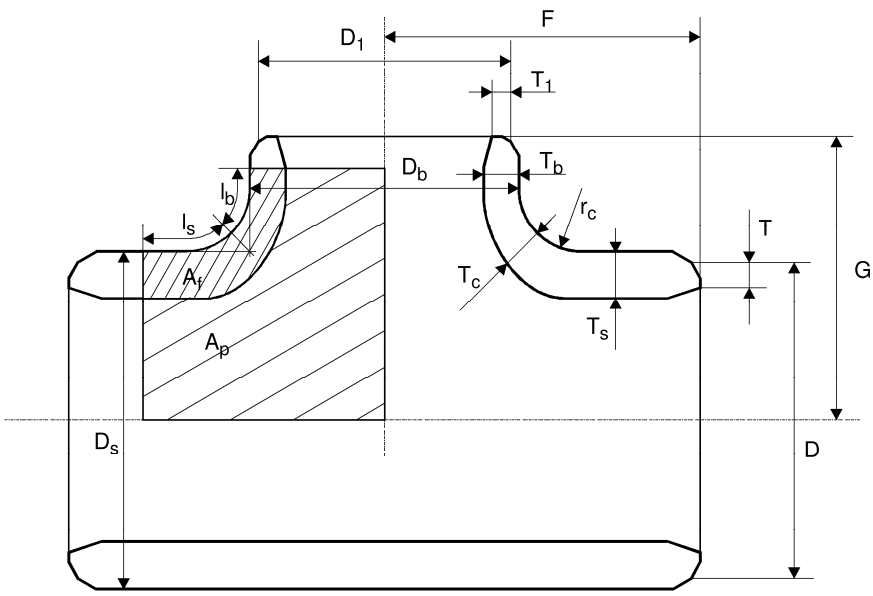

Figure B.5 — Dimensions and areas A_p and A_f of a tee

For the tee the following condition shall apply:

$$\frac{A_p}{A_f} \leq \max\left(\frac{D - 2 \cdot T_{min}}{2 \cdot T_{min}}, \frac{D_1 - 2 \cdot T_{1,min}}{2 \cdot T_{1,min}}\right) \quad \text{(B.47)}$$

The reinforcing lengths are calculated:

$$l_s = \min\left(\sqrt{(D_s - T_{s,min}) \cdot T_{s,min}}, F - \frac{D_b}{2} - \left(1 - \frac{\pi}{4}\right) \cdot r_c - T_{min}\right) \quad \text{(B.48)}$$

$$l_b = \min\left(\sqrt{(D_b - T_{b,min}) \cdot T_{b,min}}, G - \frac{D_s}{2} - \left(1 - \frac{\pi}{4}\right) \cdot r_c - T_{1,min}\right) \quad \text{(B.49)}$$

The wall thickness $T_{s,min}$ and $T_{b,min}$ apply to the whole perimeter of the run and the branch, respectively. At the transitions between the run and the branch (crotch zone) the inside and outside surfaces shall merge smoothly.

The minimum wall thickness at the branch $T_{b,min}$ shall not be larger than the minimum wall thickness at the run $T_{s,min}$.

EN 10253-4:2008 (E)

NOTE 1 Formula (B.47) is derived from (8.4.3-3) and (6.1-1) from EN 13480-3:2002, formulas (B.48) and (B.49) are based on (8.4.1-2) and (8.4.3-1) from EN 13480-3:2002. The requirement $T_{b,min} \leq T_{s,min}$ is more restrictive than the stipulations in EN 13480-3:2002, Figure 8.3.1-1.

NOTE 2 The subtraction of T_{min} and $T_{1,min}$ in (B.48) and (B.49), respectively, approximately considers the taper borings at the ends.

NOTE 3 In EN 13480-3:2002 the design is limited to $D_b - 2 \cdot T_{b,min} \leq D_s - 2 \cdot T_{s,min}$ for austenitic steels and to $D_b - 2 \cdot T_{b,min} \leq 0{,}8\ (D_s - 2 \cdot T_{s,min})$ for materials others than austenitic steels. For applications within the creep range it is limited to $D_b - 2 \cdot T_{b,min} \leq 0{,}7\ (D_s - 2 \cdot T_{b,min})$ and the design stress should be multiplied by 0,9.

Example:

Wall thicknesses of a reducing tee 813 x 8,0 – 508 x 6,3
with the geometry F = 597 mm, G = 533 mm., $D_s = D$, $D_b = D_1$, r_c = 95 mm and $T_{c,min} = (T_{s,min} + T_{b,min}) / 2$.

Assumed wall thicknesses to be checked: T_s = 19,0 mm, T_b = 15,5 mm

(B.1): T_{min} = 8 mm – 0,35 mm – 0 mm = 7,650 mm
$T_{1,min}$ = 6,3 mm · (100 – 12,5) / 100 – 0 mm = 5,513 mm
$T_{s,min}$ = 19,0 mm – 0,5 mm = 18,5 mm,
$T_{b,min}$ = 15,5 mm · (100 – 12,5) / 100 = 13,563 mm

$T_{c,min}$ = (18,5 mm + 13,563 mm) / 2 = 16,031 mm

(B.48): l_s = 121,24 mm

(B.49): l_b = 81,89 mm

For the calculation of areas A_f and A_p see Figure A.2.

$$\alpha_s = 45° \cdot \max\left(1 - \frac{l_s}{\frac{\pi}{4} \cdot r_c}, 0\right) = 0.00°$$

$$\alpha_b = 45° \cdot \max\left(1 - \frac{l_b}{\frac{\pi}{4} \cdot r_c}, 0\right) = 0.00°$$

$$l'_s = r_c - r_c \cdot \sin(\alpha_s) + \max\left(l_s - r_c \cdot \frac{\pi}{4}, 0\right) = 141.62\ mm$$

$$l'_b = r_c - r_c \cdot \sin(\alpha_s) + \max\left(l_b - r_c \cdot \frac{\pi}{4}, 0\right) = 102.28\ mm$$

$$T_{sc,min} = \frac{45° - \alpha_s}{45°} \cdot T_{s,min} + \frac{\alpha_s}{45°} \cdot T_{c,min} = 18.500\ mm$$

$$T_{bc,min} = \frac{45° - \alpha_b}{45°} \cdot T_{b,min} + \frac{\alpha_b}{45°} \cdot T_{c,min} = 13.563\ mm$$

$$A_{fs} = \max(l'_s - r_c, 0) \cdot T_{s,min} = 862.5\ mm^2$$

$$A_{fsc} = \left(\left(r_c + \frac{T_{sc,min} + T_{c,min}}{2}\right)^2 - r_c^2\right) \cdot \pi \cdot \frac{45° - \alpha_s}{360°} + T_{sc,min}^2 \cdot \frac{\tan(\alpha_s)}{2} = 1405.3\ mm^2$$

$$A_{fbc} = \left(\left(r_c + \frac{T_{bc,min} + T_{c,min}}{2}\right)^2 - r_c^2\right) \cdot \pi \cdot \frac{45° - \alpha_b}{360°} + T_{bc,min}^2 \cdot \frac{\tan(\alpha_b)}{2} = 1190.0\ mm^2$$

$$A_{fb} = \max(l'_b - r_c, 0) \cdot T_{b,min} = 98.7\ mm^2$$

$$A_f = A_{fs} + A_{fsc} + A_{Fbc} + A_{fb} = 3556.5\ mm^2$$

$$A_{psc} = r_c^2 \cdot \left(\frac{1}{2} \cdot (1 - \sin(\alpha_s))^2 - \pi \cdot \frac{45° - \alpha_s}{360°} + \frac{1}{2} \cdot \sin(\alpha_s) \cdot (\cos(\alpha_s) - \sin(\alpha_s))\right) = 968\ mm^2$$

$$A_{pbc} = r_c^2 \cdot \left(\frac{1}{2} \cdot (1 - \sin(\alpha_b))^2 - \pi \cdot \frac{45° - \alpha_b}{360°} + \frac{1}{2} \cdot \sin(\alpha_b) \cdot (\cos(\alpha_b) - \sin(\alpha_b)) \right) = 968\ mm^2$$

$$A_p = \left(\frac{D_b}{2} + l'_s \right) \cdot \left(\frac{D_s}{2} + l'_b \right) - l'_s \cdot l'_b + A_{psc} + A_{psb} - A_f = 185179\ \text{mm}^2$$

$$\frac{A_p}{A_f} = 52.07$$

$$\max\left(\frac{D - 2 \cdot T_{\min}}{2 \cdot T_{\min}}, \frac{D_1 - 2 \cdot T_{1,\min}}{2 \cdot T_{1,\min}} \right) = 52.14$$

Inequation (B.47) is satisfied (52,07 ≤ 52.14) and therefore the assumed wall thicknesses T_s and T_b are acceptable.

B.5.4 Reducers

For the design of reducers several aspects have to be taken into account. The calculations are based on the following preconditions:

— The reducer has cylindrical sections on both ends of the reducer. In some cases minimal lengths of these sections are required;

— At the transition of cylindrical sections and the conical sections the inside and outside surfaces shall merge smoothly;

— The transition between the cylindrical sections and the conical section at the major end may be curved. In this case the wall thickness of the knuckle shall be at least T_2 and the distance between the knuckle and the end of the reducer shall be at least:

$$L'_{2,\min} = 0.5 \cdot \sqrt{(D - T_{2,\min}) \cdot T_{2,\min}} \qquad \text{(B.50)}$$

— The transition between the cylindrical sections and the conical section at the minor end may be curved too. The wall thickness of the knuckle shall be at least the maximum of $T_{3,\min}$ and $T_{4,\min}$.

Wall thicknesses and other dimension of a reducer are illustrated in Figure B.6, both for concentric and eccentric type.

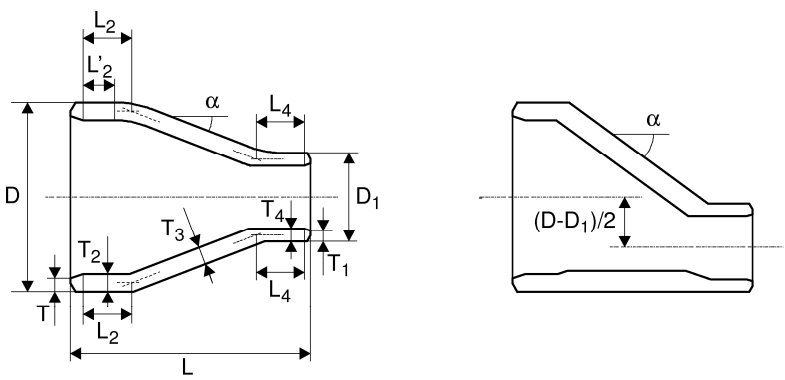

Figure B.6 — Wall thicknesses and dimensions of reducers type B

NOTE 1 The lengths L_2, L'_2 and L_4 are not measured from the ends of the reducer, but from the location where the wall thickness reaches T_2,min or T_4,min, respectively.

The reinforced wall thickness at the major end of the reducer is calculated

EN 10253-4:2008 (E)

$$T_{j,\min} = \frac{\beta \cdot D \cdot \min\left(\frac{T_{\min}}{D - T_{\min}}, \frac{T_{1,\min}}{D_1 - T_{1,\min}}\right)}{1 + \beta \cdot \min\left(\frac{T_{\min}}{D - T_{\min}}, \frac{T_{1,\min}}{D_1 - T_{1,\min}}\right)} \tag{B.51}$$

with

$$\beta = \frac{1}{3} \cdot \sqrt{\frac{D - T_{j,\min}}{T_{j,\min}}} \cdot \frac{\tan(\alpha)}{1 + \frac{1}{\sqrt{\cos(\alpha)}}} - 0.15 \tag{B.52}$$

NOTE 2 Formulas (B.51) and (B.52) cannot be evaluated directly but should be solved by iteration.

The wall thickness of the cylindrical part at the major end of the reducer shall be

$$T_{2,\min} = \max\left(T_{\min}, T_{j,\min}\right) \tag{B.53}$$

The wall thickness of a cone with the given half angle α is calculated:

$$T_{co,\min} = \frac{\left(\sqrt{\frac{D - T_{2,\min}}{\cos(\alpha)} \cdot \sin^2(\alpha) + 4 \cdot \left(\frac{1}{\min\left(\frac{T_{\min}}{D - T_{\min}}, \frac{T_{1,\min}}{D_1 - T_{1,\min}}\right)} - 1\right) \cdot \cos(\alpha) \cdot \left(D - 2 \cdot T_{2,\min}\right)} - \sqrt{\frac{D - T_{2,\min}}{\cos(\alpha)}} \cdot \sin(\alpha)\right)^2}{4 \cdot \cos^2(\alpha) \cdot \left(\frac{1}{\min\left(\frac{T_{\min}}{D - T_{\min}}, \frac{T_{1,\min}}{D_1 - T_{1,\min}}\right)} - 1\right)^2} \tag{B.54}$$

The wall thickness of the conical part of a reducer shall be

$$T_{3,\min} = \max\left(T_{co,\min}, T_{j,\min}\right) \tag{B.55}$$

The wall thickness of the cylindrical part at the minor end of the reducer shall be determined using the following formulas:

$$s = \frac{T_{3,\min}}{T_{4,\min}} \tag{B.56}$$

$$\tau = \begin{cases} s \cdot \sqrt{\frac{s}{\cos(\alpha)}} + \sqrt{\frac{1 + s^2}{2}} & if\ s < 1 \\ 1 + \sqrt{s \cdot \frac{1 + s^2}{2 \cdot \cos(\alpha)}} & if\ s \geq 1 \end{cases} \tag{B.57}$$

$$\beta_H = 0.4 \cdot \sqrt{\frac{D_1 - T_{4,\min}}{T_{4,\min}}} \cdot \frac{\tan(\alpha)}{\tau} + 0.5 \tag{B.58}$$

if

$$\min\left(\frac{T_{\min}}{D-T_{\min}},\frac{T_{1,\min}}{D_1-T_{1,\min}}\right)\leq\frac{T_{4,\min}}{\left(D_1-T_{4,\min}\right)\cdot\beta_H} \tag{B.59}$$

and

$$T_{4,\min}\geq T_{1,\min} \tag{B.60}$$

$T_{4,\min}$ is acceptable. If not, the calculation shall be repeated with a larger value of $T_{4,\min}$. In order to satisfy (B.59) it is also allowed to increase value of $T_{3,\min}$.

If the wall thickness of the cylindrical part at the major end of the reducer has to be reinforced, a minimal length of this part shall be assured

$$L_{2,\min}=\begin{cases}1.4\cdot\sqrt{\left(D-T_{2,\min}\right)\cdot T_{2,\min}} & if\ T_{2,\min}>T_{\min}\\ 0 & if\ T_{2,\min}\leq T_{\min}\end{cases} \tag{B.61}$$

If the wall thickness of the cylindrical part at the minor end of the reducer has to be reinforced, a minimal length of this part shall be assured.

$$L_{4,\min}=\begin{cases}\sqrt{\left(D_1-T_{4,\min}\right)\cdot T_{4,.\min}} & if\ T_{4,\min}>T_{1,\min}\\ 0 & if\ T_{4,\min}\leq T_{1,\min}\end{cases} \tag{B.62}$$

If smaller lengths for L_2 and/or L_4 than calculated above are desired it is possible to increase the wall thickness and reduce the lengths:

$$T'_{2,\min}=\frac{T_{2,\min}\cdot L_{2,\min}-T_{\min}\cdot\left(L_{2,\min}-L_2\right)}{L_2} \tag{B.63}$$

$$T'_{4,\min}=\frac{T_{4,\min}\cdot L_{4,\min}-T_{1,\min}\cdot\left(L_{4,\min}-L_4\right)}{L_4} \tag{B.64}$$

The calculation procedure described may be used for straight reducers provided the circumflex welds at the ends of the reducers shall be subject to 100 % non-destructive examination, either by radiography or ultrasonic techniques, and the reducer is located between pipes with minimal wall thicknesses of at least $T_{2,\min}$ and $T_{4,\min}$, respectively. If no non-destructive examination of the welds is done, all wall thicknesses shall be multiplied by 1.4.

NOTE 3 Formulas (B.51) to (B.60) are applicable only for semi angle α less equal 75° and ratios of $T_{3,\min}\cos(\alpha)$ to D not smaller than 0,001.

NOTE 4 The design of reducers is based on the following sections/formulas in EN 13480-3:2002:Formula (B.50) is based on the stipulations in 6.4.7.2,
Formula (B.51) is derived from (6.4.6-2) and (6.1-1),
Formula (B.52) is given as (6.4.6-1),
Formula (B.53) is based on the stipulations in 6.4.6.2,
Formula (B.54) is derived from (6.4.4-3) and (6.1-1) using (6.4.4-4), (6.4.4-5), (6.4.4-6), (6.4.4-7) and (6.4.5-2), setting r = 0 and solving for econ,
Formula (B.55) is based on the stipulations in 6.4.6.2,
Formula (B.56) is given in EN 13480-3 as (6.4.8-1),
Formula (B.57) is based on (6.4.8-2) and (6.4.8-3),
Formula (B.58) is given in EN 13480-3 as (6.4.8-4),
Formula (B.59) is derived from (6.4.8-5) and (6.1-1),
Formula (B.60) is based on the stipulations in 6.4.8.1 b),
Formula (B.61) is based on (6.4.5-1) and the provisions in 6.4.6.2,
Formula (B.62) is based on the stipulations in 6.4.8.1 a),
Formula (B.63) is based on the stipulations in 6.4.6.2,
Formula (B.64) is based on the stipulations in 6.4.8.2.

EN 10253-4:2008 (E)

No additional calculation of the wall thickness of the knuckle at the major end is required. The formulas in EN 13480-3:2002 (6.4.7-1) to (6.4.7-4) give wall thicknesses which are not larger than for junctions without a knuckle.

The rules for a knuckle at the minor end differs from the stipulations in EN 13480-3:2002.

The stipulations for straight reducers are based on EN 13480-3:2002 6.4.6.1 2).

Example:

Design of an eccentric reducer of type B 323,9 x 7.1 – 168,3 x 4,5,

c_0 = 0 mm, semi angle α = 55°:

Table A.5: L = 203 mm.

(B.1): $T_{\min}$ = 7,1 mm (100 – 12,5) / 100 – 0 mm = 6,213 mm

$T_{1,\min}$ = 4,5 mm (100 – 12,5) / 100 – 0 mm = 3,938 mm

Result of solving (B.51) and (B.52) by iteration: $T_{j,\min}$ = 7,385 mm, β = 1,193

(B.53): $T_{2,\min}$ = 7,385 mm

(B.54) $T_{co,\min}$ = 8,768 mm

(B.55) $T_{3,\min}$ = 8,768 mm

Result of solving (B.56) to (B.60) by iteration: $T_{4,\min}$ = 4,454 mm, s = 1,969, τ = 3,893, β_H = 1,390

(B.61): $L_{2,\min}$ = 67,69 mm

(B.62): $L_{4,\min}$ = 27,01 mm

(B.50): $L'_{2,\min}$ = 24,17 mm

(B.2): T_2 = (7,385 mm + 0 mm) / (100 – 12,5) 100 = 8,44 mm

T_3 = (8,768 mm + 0 mm) / (100 – 12,5) 100 = 10,02 mm

T_4 = (4,45 mm + 0 mm) / (100 – 12,5) 100 = 5,09 mm

The results of the design are:

T_2 = 8,44 mm, L_2 ≥ 67,7 mm, L'_2 ≥ 24,2 mm, T_3 = 10,02 mm, T_4 = 5,09 mm, L_4 ≥ 27,0 mm

The length L_2 and L_4 are quite long compared to the total length of the reducer L. Therefore, an alternative design with lengths L_2 = 30 mm and L_4 = 20 is made:

(B.63) $T'_{2,\min}$ = 8,858 mm

(B.64) $T'_{4,\min}$ = 4,635 mm

(B.2): T_2 = (8,86 mm + 0 mm) / (100 – 12,5) 100 = 10,12 mm

T_4 = (4,64 mm + 0 mm) / (100 – 12,5) 100 = 5,30 mm

The results of the alternative design are:

T_2 = 10,12 mm, L_2 ≥ 30 mm, L'_2 ≥ 24,2 mm, T_3 = 10,02 mm, T_4 = 5,29 mm, L_4 ≥ 20 mm

B.5.5 Caps

The design of a torispherical end comprises the determination of the wall thickness of the spherical end and the wall thickness of the knuckle. For the wall thickness of a cap the wall thickness requirements of the cylindrical part have also to be taken into consideration too:

$$T_{s,\min} = T_{\min} \cdot \frac{R1}{D - 1.5 \cdot T_{\min}} \qquad \text{(B.65)}$$

$$T_{kn\,y,\min} = T_{\min} \frac{\beta \cdot (0.75 \cdot R1 + 0.2 \cdot D)}{0.5 \cdot D - (0.5 - 0.4 \cdot \beta) \cdot T_{\min}} \qquad \text{(B.66)}$$

$$T_{knb,\min} = \left(0.75 \cdot R1 + 0.2 \cdot \left(D - 2 \cdot T_{knb,\min}\right)\right) \cdot \left(\frac{1}{111} \cdot \frac{2 \cdot T_{\min}}{D - T_{\min}} \cdot \left(\frac{D - 2 \cdot T_{knb,\min}}{r}\right)^{0.825}\right)^{\frac{1}{1.5}} \quad \text{(B.67)}$$

$$T_{c,\min} = \max\left(T_{s,\min},\ T_{kny,\min},\ T_{knb,\min},\ T_{\min}\right) \quad \text{(B.68)}$$

The factors β is calculated:

$$Y = \min\left(\frac{T_{kny,\min}}{R1},\ 0.04\right) \quad \text{(B.69)}$$

$$Z = \log\left(\frac{1}{Y}\right) \quad \text{(B.70)}$$

$$W = \frac{r}{D - 2 \cdot T_{kny,\min}} \quad \text{(B.71)}$$

$$N = 1.006 - \frac{1}{6.2 + (90 \cdot Y)^4} \quad \text{(B.72)}$$

$$\beta_{0.06} = \left(-0.3635 \cdot Z^3 + 2.2124 \cdot Z^2 - 3.2937 \cdot Z + 1.8873\right) \cdot N \quad \text{(B.73)}$$

$$\beta_{0.1} = \left(-0.1833 \cdot Z^3 + 1.0383 \cdot Z^2 - 1.2943 \cdot Z + 0.837\right) \cdot N \quad \text{(B.74)}$$

$$\beta_{0.2} = 0.5 \quad \text{(B.75)}$$

$$\beta = \begin{cases} 25 \cdot \left((0.1 - W) \cdot \beta_{0.06} + (W - 0.06) \cdot \beta_{0.1}\right) & \text{if } 0.06 \le W \le 0.1 \\ 10 \cdot \left((0.2 - W) \cdot \beta_{0.1} + (W - 0.1) \cdot \beta_{0.2}\right) & \text{if } 0.1 < W \le 0.2 \end{cases} \quad \text{(B.76)}$$

NOTE 1 Formula (B.66) with β from formulas (B.69) to (B.76) cannot be evaluated directly but should be solved by iteration. Formula (B.67) cannot be evaluated directly but should be solved by iteration, too.

NOTE 2 Formulas (B.65) to (B.76) are applicable provided that the following conditions are simultaneously fulfilled:
$r \ge 0{,}06 \times (D - 2\ T_{c,\min})$
$r \ge 3 \times T_{c,\min}$
$0{,}001 \times (D - 2\ T_{c,\min}) < T_{c,\min} \le 0{,}08\ (D - 2 \times T_{c,\min})$
$R1 \le D$

NOTE 3 Where $T_{kn\ y,\min} > 0{,}004 \times (D - 2 \times T_{c,\min})$, it is not necessary to calculate $T_{kn\ b,\min}$ (B.67)

NOTE 4 The calculation of caps is based on the following formulas in EN 13480-3:2002:
Formula (B.65) is derived from (7.1.3-1) and (6.1-1),
Formula (B.66) is derived from (7.1.3-2) and (6.1-1),
Formula (B.67) is derived from (7.1.3-3) and (6.1-1),
Formula (B.69) is given as (7.1.5-1)
Formula (B.70) is given as (7.1.5-2)
Formula (B.71) is given as (7.1.5-3)
Formula (B.72) is given as (7.1.5-4)
Formula (B.73) is given as (7.1.5-6)
Formula (B.74) is given as (7.1.5-5)
Formula (B.75) is read from Figure 7.1.5-1,
Formula (B.76) is given as (7.1.5-8) and (7.1.5-7).

Example:

Wall thickness of a cap 1219 x 10,

c_0 = 0 mm, r = 0,15· D, $R1$ = 0,8·D:

EN 10253-4:2008 (E)

r = 0,15 x 1219 = 183 mm

$R1$ = 0,8 x 1219 = 975 mm

(B.1): T_{min} = 10 mm – 0,35 mm – 0 mm = 9,65 mm

(B.65): $T_{s,min}$ = 7,813 mm

Result of solving (B.66) with (B.69) to (B.76) by iteration:

$T_{kn\ y,min}$ = 9,961, Y = 0,01021, Z = 1,991, W = 0,152, N = 0,861, $\beta_{0.06}$ = 1,060, $\beta_{0.1}$ = 0,800, β = 0,643

Result of solving (B.67) by iteration: $T_{kn\ b,min}$ = 7,523 mm

(B.68): $T_{c,min}$ = 9,961 mm

(B.2): T_c = 10,46 mm

Annex C
(normative)

Pressure factor tables for fittings of type A

C.1 General

This annex lists pressure factors of elbows, tees, reducers and caps designated by their outside diameter for six wall thickness series.

These pressure factors are calculated using the procedures given in Annex B and tolerances listed in Table 9. For the corrosion allowance 0 mm is used.

NOTE In general, corrosion allowances larger than 0 mm lead to smaller pressure factors.

For the definition of symbols see B.2 and the figures in Annex B.

The pressure factor of fittings with nominal dimensions not listed in the tables of this annex, with a corrosion allowance larger than 0 mm or with other tolerances may be calculated in accordance with Annex B.

C.2 Elbows

Table C.1 shows the pressure factors of elbows of model 2D, 3D and 5D (indicated in second line of table) whose dimensions are given in Table A.1.

NOTE For the bending Radius R the distance from the centreline to the face of the elbow F from Table A.1 is used.

EN 10253-4:2008 (E)

Table C.1 — Pressure factors of elbows type A

		1				2				3				4				5				6			
Model			2D	3D	5D		2D	3D	5D		2D	3D	5D		2D	3D	5D		2D	3D	5D		2D	3D	5D
DN	*D*	*T*	*X*	*X*	*X*	*T*	*X*	*X*	*X*	*T*	*X*	*X*	*X*	*T*	*X*	*X*	*X*	*T*	*X*	*X*	*X*	*T*	*X*	*X*	*X*
15	21,3	1,6	-	78	87	-	-	-	-	-	-	-	-	2,0	-	78	87	3,2	-	80	88	4,0	-	81	89
20	26,9	1,6	-	71	87	-	-	-	-	-	-	-	-	2,0	-	72	87	3,2	-	74	88	4,0	-	75	88
25	33,7	1,6	-	73	87	2,0	-	73	87	-	-	-	-	2,3	-	73	87	3,2	-	74	88	4,5	-	75	88
32	42,4	1,6	-	72	87	2,0	-	73	87	-	-	-	-	2,6	-	73	87	3,6	-	74	88	5,0	-	75	88
40	48,3	1,6	-	74	87	2,0	-	74	87	-	-	-	-	2,6	-	74	88	3,6	-	75	88	5,0	-	76	88
50	60,3	1,6	59	75	87	2,0	59	76	87	2,3	60	76	87	2,9	60	76	88	4,0	61	77	88	5,6	62	77	88
65	76,1	1,6	57	75	88	2,3	58	75	88	2,6	58	75	88	2,9	58	76	88	5,0	60	76	88	7,1	61	77	88
80	88,9	2,0	59	76	88	2,3	59	76	88	2,9	60	76	88	3,2	60	76	88	5,6	61	77	88	8,0	63	78	88
100	114,3	2,0	61	77	88	2,6	62	77	88	2,9	62	77	88	3,6	62	77	88	6,3	63	78	88	8,8	64	78	89
125	139,7	2,0	62	77	88	2,6	62	77	88	3,2	63	78	88	4,0	63	78	88	6,3	64	78	88	10,0	65	79	89
150	168,3	2,0	62	77	88	2,6	62	77	88	3,2	62	77	88	4,5	62	78	88	7,1	63	78	88	11,0	64	79	88
200	219,1	2,0	63	78	88	2,6	63	78	88	3,6	63	78	88	6,3	64	78	88	8,0	64	78	88	12,5	65	79	88
250	273,0	2,0	63	78	88	3,6	63	78	88	4,0	63	78	88	6,3	64	78	88	10,0	64	79	88	-	-	-	-
300	323,9	2,6	64	78	88	4,0	64	78	88	4,5	64	78	88	7,1	64	78	88	10,0	65	79	88	-	-	-	-
350	355,6	2,6	67	80	88	4,0	67	80	88	5,0	67	80	88	8,0	67	80	88	11,0	67	80	88	-	-	-	-
400	406,4	2,6	66	80	88	4,0	67	80	88	5,0	67	80	88	8,8	67	80	88	12,5	67	80	88	-	-	-	-
450	457	3,2	66	80	88	4,0	67	80	88	5,0	67	80	88	10,0	67	80	88	-	-	-	-	-	-	-	-
500	508	3,2	66	80	88	5,0	67	80	88	5,6	67	80	88	11,0	67	80	88	-	-	-	-	-	-	-	-
600	610	3,2	66	80	88	5,6	67	80	88	6,3	67	80	88	12,5	67	80	89	-	-	-	-	-	-	-	-
700	711	4,0	0	80	88	5,6	0	80	88	7,1	-	80	89	12,5	-	80	89	-	-	-	-	-	-	-	-
800	813	4,0	0	80	88	5,6	0	80	88	8,0	-	80	89	12,5	-	80	89	-	-	-	-	-	-	-	-
900	914	4,0	0	80	88	6,3	0	80	88	8,8	-	80	89	12,5	-	80	89	-	-	-	-	-	-	-	-
1000	1016	4,0	0	80	88	6,3	0	80	88	10,0	-	80	89	12,5	-	80	89	-	-	-	-	-	-	-	-

C.3 Tees

Table C.2 shows the pressure factors of equal tees and reducing tees.

The data listed is applicable if the following conditions apply:

— The crotch radius is less equal to 3/4 of the height of the branch ($r_c \leq 0{,}75\ (G - D/2)$) and

— the wall thickness at the crotch zone is at least the mean of the wall thicknesses of run and branch ($T_{c,min} \geq (T_{min} + T_{1,min}) / 2$) and

— dimensions F and G are as listed in Table A.2.

In all other cases the pressure factor may be calculated in accordance with Annex B.

NOTE Table C.2 may be applied to branch welded tees with dimensions according to Table A.4, as the length F listed in Table A.4 is longer than the lengths F and G listed in Table A.2 and the criteria for the crotch radius established above is also satisfied. Table D.2 may not be applied to pulled tees according to Table A.3 as the lengths F and $G = D/2 + h$ are smaller than the lengths listed in Table A.2.

EN 10253-4:2008 (E)

Table C.2 — Pressure factors of tees type A

				1			2			3			4			5			6		
DN	*D*	DN_1	D_1	*T*	T_1	*X*	*T*	T_1	*X*	*T*	T_1	*X*	*T*	T_1	*X*	*T*	T_1	*X*	*T*	T_1	*X*
15	21,3	15	21,3	1,6	1,6	39	-	-	-	-	-	-	2,0	2,0	42	3,2	3,2	48	4,0	4,0	51
20	26,9	20	26,9	1,6	1,6	38	-	-	-	-	-	-	2,0	2,0	41	3,2	3,2	47	4,0	4,0	50
		15	21,3	1,6	1,6	43	-	-	-	-	-	-	2,0	2,0	46	3,2	3,2	53	4,0	4,0	57
25	33,7	25	33,7	1,6	1,6	35	2,0	2,0	37	-	-	-	2,3	2,3	39	3,2	3,2	43	4,5	4,5	47
		20	26,9	1,6	1,6	39	-	-	-	-	-	-	2,3	2,0	40	3,2	3,2	48	4,5	4,0	49
		15	21,3	1,6	1,6	43	-	-	-	-	-	-	2,3	2,0	44	3,2	3,2	54	4,5	4,0	55
32	42,4	32	42,4	1,6	1,6	32	2,0	2,0	34	-	-	-	2,6	2,6	38	3,6	3,6	42	5,0	5,0	46
		25	33,7	1,6	1,6	36	2,0	2,0	39	-	-	-	2,6	2,3	39	3,6	3,2	43	5,0	4,5	48
		20	26,9	1,6	1,6	40	-	-	-	-	-	-	2,6	2,0	40	3,6	3,2	48	5,0	4,0	50
		15	21,3	1,6	1,6	43	-	-	-	-	-	-	2,6	2,0	44	3,6	3,2	52	5,0	4,0	54
40	48,3	40	48,3	1,6	1,6	30	2,0	2,0	32	-	-	-	2,6	2,6	35	3,6	3,6	39	5,0	5,0	43
		32	42,4	1,6	1,6	32	2,0	2,0	34	-	-	-	2,6	2,6	38	3,6	3,6	42	5,0	5,0	46
		25	33,7	1,6	1,6	35	2,0	2,0	38	-	-	-	2,6	2,3	39	3,6	3,2	43	5,0	4,5	48
		20	26,9	1,6	1,6	39	-	-	-	-	-	-	2,6	2,0	39	3,6	3,2	47	5,0	4,0	49
50	60,3	50	60,3	1,6	1,6	29	2,0	2,0	32	2,3	2,3	33	2,9	2,9	36	4	4	40	5,6	5,6	44
		40	48,3	1,6	1,6	34	2,0	2,0	37	-	-	-	2,9	2,6	39	4	3,6	44	5,6	5,0	48
		32	42,4	1,6	1,6	38	2,0	2,0	41	-	-	-	2,9	2,6	43	4	3,6	48	5,6	5,0	53
		25	33,7	1,6	1,6	45	2,0	2,0	49	-	-	-	2,9	2,3	48	4	3,2	53	5,6	4,5	59
65	76,1	65	76,1	1,6	1,6	28	2,3	2,3	32	2,6	2,6	33	2,9	2,9	34	5	5	41	7,1	7,1	46
		50	60,3	1,6	1,6	33	2,3	2,0	34	2,6	2,3	36	2,9	2,9	41	5	4	42	7,1	5,6	47
		40	48,3	1,6	1,6	38	2,3	2,0	40	-	-	-	2,9	2,6	44	5	3,6	46	7,1	5,0	51
		32	42,4	1,6	1,6	42	2,3	2,0	43	-	-	-	2,9	2,6	48	5	3,6	51	7,1	5,0	55
80	88,9	80	88,9	2,0	2,0	29	2,3	2,3	30	2,9	2,9	33	3,2	3,2	34	5,6	5,6	41	8,0	8,0	46
		65	76,1	2,0	1,6	30	2,3	2,3	34	2,9	2,6	34	3,2	2,9	36	5,6	5	43	8,0	7,1	47
		50	60,3	2,0	1,6	33	2,3	2,0	37	2,9	2,3	38	3,2	2,9	42	5,6	4	45	8,0	5,6	49
		40	48,3	2,0	1,6	38	2,3	2,0	42	-	-	-	3,2	2,6	46	5,6	3,6	49	8,0	5,0	53
100	114,3	100	114,3	2,0	2,0	27	2,6	2,6	30	2,9	2,9	31	3,6	3,6	34	6,3	6,3	40	8,8	8,8	45
		80	88,9	2,0	2,0	32	2,6	2,3	33	2,9	2,9	37	3,6	3,2	37	6,3	5,6	45	8,8	8,0	50
		65	76,1	2,0	1,6	31	2,6	2,3	37	2,9	2,6	38	3,6	2,9	39	6,3		46	8,8	7,1	52
		50	60,3	2,0	1,6	37	2,6	2,0	40	2,9	2,3	42	3,6	2,9	45	6,3	4	49	8,8		
		125	139,7	2,0	2,0	25	2,6	2,6	28	3,2	3,2	30	4,0	4,0	33	6,3	6,3	39	10,0		

EN 10253-4:2008 (E)

				1			2			3			4			5			6		
DN	*D*	DN_1	D_1	*T*	T_1	*X*	*T*	T_1	*X*	*T*	T_1	*X*	*T*	T_1	*X*	*T*	T_1	*X*	*T*	T_1	*X*
		100	114,3	2,0	2,0	30	2,6	2,6	33	3,2	2,9	33	4,0	3,6	36	6,3	6,3	44	10,0	8,8	47
		80	88,9	2,0	2,0	35	2,6	2,3	36	3,2	2,9	39	4,0	3,2	39	6.3	5,6	48	10,0	8,0	52
		65	76,1	2,0	1,6	34	2,6	2,3	39	3,2	2,6	40	4,0	2,9	41	6.3	5	50	10,0	7,1	54
150	168.3	150	168,3	2,0	2,0	24	2,6	2,6	27	3,2	3,2	29	4,5	4,5	33	7.1	7,1	38	11,0	11,0	44
		125	139,7	2,0	2,0	28	2,6	2,6	31	3,2	3,2	33	4,5	4,0	35	7.1	6,3	40	11,0	10,0	47
		100	114,3	2,0	2,0	32	2,6	2,6	35	3,2	2,9	36	4,5	3,6	38	7.1	6,3	46	11,0	8,8	50
		80	88,9	2,0	2,0	38	2,6	2,3	38	3,2	2,9	42	4,5	3,2	42	7.1	5,6	51	11,0	8,0	55
200	219.1	200	219,1	2,0	2,0	22	2,6	2,6	25	3,6	3,6	28	6,3	6,3	34	8	8	37	12,5	12,5	43
		150	168,3	2,0	2,0	27	2,6	2,6	30	3,6	3,2	31	6,3	4,5	37	8	7,1	41	12,5	11,0	47
		125	139,7	2,0	2,0	31	2,6	2,6	34	3,6	3,2	36	6,3	4,0	37	8	6,3	44	12,5	10,0	51
		100	114,3	2,0	2,0	35	2,6	2,6	39	3,6	2,9	38	6,3	3,6	40	8	6,3	50	12,5	8,8	54
250	273	250	273	2,0	2,0	21	3,6	3,6	26	4,0	4,0	27	6,3	6,3	32	10	10	38	-	-	-
		200	219,1	2,0	2,0	24	3,6	2,6	28	4,0	3,6	30	6,3	6,3	38	10	8	39	-	-	-
		150	168,3	2,0	2,0	29	3,6	2,6	30	4,0	3,2	33	6,3	4,5	37	10	7,1	43	-	-	-
		125	139,7	2,0	2,0	33	3,6	2,6	34	4,0	3,2	37	6,3	4,0	40	10	6,3	46	-	-	-
300	323.9	300	323,9	2,6	2,6	22	4,0	4,0	26	4,5	4,5	27	7,1	7,1	32	10	10	36	-	-	-
		250	273	2,6	2,0	23	4,0	3,6	27	4,5	4,0	28	7,1	6,3	33	10	10	41	-	-	-
		200	219,1	2,6	2,0	25	4,0	2,6	28	4,5	3,6	31	7,1	6,3	39	10	8	41	-	-	-
		150	168,3	2,6	2,0	30	4,0	2,6	32	4,5	3,2	35	7,1	4,5	39	10	7,1	46	-	-	-
350	355.6	350	355,6	2,6	2,6	21	4,0	4,0	25	5,0	5,0	27	8,0	8,0	32	11	11	36	-	-	-
		300	323,9	2,6	2,6	22	4,0	4,0	27	5,0	4,5	27	8,0	7,1	33	11	10	36	-	-	-
		250	273	2,6	2,0	22	4,0	3,6	28	5,0	4,0	29	8,0	6,3	34	11	10	41	-	-	-
		200	219,1	2,6	2,0	25	4,0	2,6	28	5,0	3,6	32	8,0	6,3	39	11	8	42	-	-	-
400	406.4	400	406,4	2,6	2,6	20	4,0	4,0	24	5,0	5,0	26	8,8	8,8	32	12.5	12,5	36	-	-	-
		350	355,6	2,6	2,6	22	4,0	4,0	26	5,0	5,0	28	8,8	8,0	33	12.5	11	36	-	-	-
		300	323,9	2,6	2,6	23	4,0	4,0	28	5,0	4,5	28	8,8	7,1	33	12.5	10	37	-	-	-
		250	273	2,6	2,0	23	4,0	3,6	30	5,0	4,0	30	8,8	6,3	35	12.5	10	42	-	-	-
450	457	450	457	3,2	3,2	21	4,0	4,0	23	5,0	5,0	25	10,0	10,0	32	-	-	-	-	-	-
		400	406,4	3,2	2,6	22	4,0	4,0	25	5,0	5,0	27	10,0	8,8	33	-	-	-	-	-	-
		350	355,6	3,2	2,6	22	4,0	4,0	27	5,0	5,0	30	10,0	8,0	33	-	-	-	-	-	-
		300	323,9	3,2	2,6	23	4,0	4,0	29	5,0	4,5	30	10,0	7,1	34	-	-	-	-	-	-
500	508	500	508	3,2	3,2	20	5,0	5,0	24	5,6	5,6	25	11,0	11,0	32	-	-	-	-	-	-
		450	457	3,2	3,2	22	5,0	4,0	25	5,6	5,0	25	11,0	10,0	33	-	-	-	-	-	-
		400	406,4	3,2	2,6	21	5,0	4,0	25	5,6	5,0	27	11,0	8,8	33	-	-	-	-		

EN 10253-4:2008 (E)

				1			2			3			4			5			6		
DN	*D*	DN_1	D_1	*T*	T_1	*X*	*T*	T_1	*X*	*T*	T_1	*X*	*T*	T_1	*X*	*T*	T_1	*X*	*T*	T_1	*X*
		350	355,6	3,2	2,6	23	5,0	4,0	27	5,6	5,0	30	11,0	8,0	34	-	-	-	-	-	-
600	610	600	610	3,2	3,2	19	5,6	5,6	24	6,3	6,3	25	12,5	12,5	32	-	-	-	-	-	-
		500	508	3,2	3,2	21	5,6	5,0	25	6,3	5,6	26	12,5	11,0	33	-	-	-	-	-	-
		450	457	3,2	3,2	23	5,6	4,0	25	6,3	5,0	26	12,5	10,0	34	-	-	-	-	-	-
		400	406,4	3,2	2,6	22	5,6	4,0	26	6,3	5,0	29	12,5	8,8	35	-	-	-	-	-	-
700	711	700	711	4,0	4,0	19	5,6	5,6	23	7,1	7,1	25	12,5	12,5	31	-	-	-	-	-	-
800	813	800	813	4,0	4,0	18	5,6	5,6	21	8,0	8,0	25	12,5	12,5	30	-	-	-	-	-	-
900	914	900	914	4,0	4,0	17	6,3	6,3	21	8,8	8,8	25	12,5	12,5	28	-	-	-	-	-	-
1000	1016	1000	1016	4,0	4,0	17	6,3	6,3	21	10,0	10,0	25	12,5	12,5	27	-	-	-	-	-	-

C.4 Reducers

Table C.3 and Table C.4 show the pressure factors of concentric and eccentric reducers, respectively.

The data listed is applicable if all of the following conditions apply:

— The semi angle of the reducer is not larger than the values listed in Table C.3 and C.4.

— The wall thickness of the conical part is at least the wall thickness at the major end.

— Each of the lengths L_2 and L_4 at the ends of the reducer is at least 10 % of the total length L listed in Table A.5.

— At the transitions between the cylindrical sections and the conical sections the inside and outside surfaces shall merge smoothly.

— The length L'_2 between a knuckle and the major end of a reducer is at least

$$L'_2 \geq 0.5 \cdot \sqrt{(D-T) \cdot T} \qquad \text{(C.1)}$$

or, alternatively, at least $L'_{2,\min}$ given by formula (B.10).

— The transition between the cylindrical sections and the conical section at the minor end may be curved too. The wall thickness of the knuckle shall be the same as the wall thickness of the conical part.

In all other cases the pressure factor may be calculated in accordance with Annex B.

If the pressure factor is shown in brackets the lengths required at the ends of the reducer are larger than 10 % of the total length L listed in Table A.5. In this case the pressure factor is applicable only if the lengths L_2 and L_4 are at least $L_{2,\min}$ and $L_{4,\min}$ given by formulas (B.29) and (B.30) or if the reducer is situated between tubes with wall thicknesses of T and T_1, respectively.

NOTE Table C.3 and C.4 are not applicable for straight reducers.

EN 10253-4:2008 (E)

Table C.3 — Pressure factors of concentric reducers type A

					1			2			3			4			5			6		
DN	*D*	DN_1	D_1	α_{max}	*T*	T_1	*X*	*T*	T_1	*X*	*T*	T_1	*X*	*T*	T_1	*X*	*T*	T_1	*X*	*T*	T_1	*X*
20	26,9	15	21,3	8	1,6	1,6	100	-	-	-	-	-	-	2,0	2,0	100	3,2	3,2	100	4,0	4,0	100
25	33,7	20	26,9	7	1,6	1,6	100	-	-	-	-	-	-	2,3	2,0	100	3,2	3,2	100	4,5	4,0	100
		15	21,3	12	1,6	1,6	100	-	-	-	-	-	-	2,3	2,0	100	3,2	3,2	100	4,5	4,0	100
32	42,4	25	33,7	9	1,6	1,6	100	2,0	2,0	100	-	-	-	2,6	2,3	100	3,6	3,2	100	5,0	4,5	100
		20	26,9	15	1,6	1,6	100	-	-	-	-	-	-	2,6	2,0	100	3,6	3,2	100	5,0	4,0	100
		15	21,3	19	1,6	1,6	100	-	-	-	-	-	-	2,6	2,0	100	3,6	3,2	100	5,0	4,0	100
40	48,3	32	42,4	6	1,6	1,6	100	2,0	2,0	100	-	-	-	2,6	2,6	100	3,6	3,6	100	5,0	5,0	100
		25	33,7	10	1,6	1,6	100	2,0	2,0	100	-	-	-	2,6	2,3	100	3,6	3,2	100	5,0	4,5	100
		20	26,9	16	1,6	1,6	100	-	-	-	-	-	-	2,6	2,0	100	3,6	3,2	100	5,0	4,0	100
50	60,3	40	48,3	7	1,6	1,6	100	2,0	2,0	100	-	-	-	2,9	2,6	100	4,0	3,6	100	5,6	5,0	100
		32	42,4	11	1,6	1,6	100	2,0	2,0	100	-	-	-	2,9	2,6	100	4,0	3,6	100	5,6	5,0	100
		25	33,7	16	1,6	1,6	100	2,0	2,0	100	-	-	-	2,9	2,3	100	4,0	3,2	100	5,6	4,5	100
65	76,1	50	60,3	9	1,6	1,6	100	2,3	2,0	100	2,6	2,3	100	2,9	2,9	100	5,0	4,0	100	7,1	5,6	100
		40	48,3	15	1,6	1,6	100	2,3	2,0	100	-	-	-	2,9	2,6	100	5,0	3,6	100	7,1	5,0	100
		32	42,4	18	1,6	1,6	100	2,3	2,0	100	-	-	-	2,9	2,6	100	5,0	3,6	100	7,1	5,0	100
80	88,9	65	76,1	7	2,0	1,6	100	2,3	2,3	100	2,9	2,6	100	3,2	2,9	100	5,6	5,0	100	8,0	7,1	100
		50	60,3	16	2,0	1,6	100	2,3	2,0	100	2,9	2,3	100	3,2	2,9	100	5,6	4,0	100	8,0	5,6	100
		40	48,3	22	2,0	1,6	100	2,3	2,0	100	-	-	-	3,2	2,6	100	5,6	3,6	100	8,0	5,0	100
100	114,3	80	88,9	13	2,0	2,0	100	2,6	2,3	100	2,9	2,9	100	3,6	3,2	100	6,3	5,6	100	8,8	8,0	100
		65	76,1	18	2,0	1,6	100	2,6	2,3	100	2,9	2,6	100	3,6	2,9	100	6,3	5,0	100	8,8	7,1	100
		50	60,3	26	2,0	1,6	96	2,6	2,0	98	2,9	2,3	99	3,6	2,9	100	6,3	4,0	100	8,8	5,6	100
125	139,7	100	114,3	10	2,0	2,0	100	2,6	2,6	100	3,2	2,9	100	4,0	3,6	100	6,3	6,3	100	10,0	8,8	100
		80	88,9	20	2,0	2,0	99	2,6	2,3	100	3,2	2,9	100	4,0	3,2	100	6,3	5,6	100	10,0	8,0	100
		65	76,1	25	2,0	1,6	96	2,6	2,3	97	3,2	2,6	98	4,0	2,9	100	6,3	5,0	100	10,0	7,1	100
150	168,3	125	139,7	9	2,0	2,0	100	2,6	2,6	100	3,2	3,2	100	4,5	4,0	100	7,1	6,3	100	11,0	10,0	100
		100	114,3	19	2,0	2,0	98	2,6	2,6	99	3,2	2,9	100	4,5	3,6	100	7,1	6,3	100	11,0	8,8	100
		80	88,9	27	2,0	2,0	94	2,6	2,3	95	3,2	2,9	96	4,5	3,2	98	7,1	5,6	100	11,0	8,0	100

EN 10253-4:2008 (E)

					1			2			3			4			5			6		
DN	*D*	DN_1	D_1	α_{max}	*T*	T_1	*X*	*T*	T_1	*X*	*T*	T_1	*X*	*T*	T_1	*X*	*T*	T_1	*X*	*T*	T_1	*X*
200	219,1	150	168,3	18	2,0	2,0	98	2,6	2,6	99	3,6	3,2	100	6,3	4,5	100	8,0	7,1	100	12,5	11,0	100
		125	139,7	27	2,0	2,0	93	2,6	2,6	94	3,6	3,2	96	6,3	4,0	99	8,0	6,3	100	12,5	10,0	100
		100	114,3	33	2,0	2,0	89	2,6	2,6	90	3,6	2,9	91	6,3	3,6	95	8,0	6,3	97	12,5	8,8	100
250	273	200	219,1	16	2,0	2,0	99	3,6	2,6	100	4,0	3,6	100	6,3	6,3	100	10,0	8,0	100	-	-	-
		150	168,3	30	2,0	2,0	91	3,6	2,6	(91)	4,0	3,2	93	6,3	4,5	95	10,0	7,1	99	-	-	-
		125	139,7	36	2,0	2,0	(78)	3,6	2,6	88	4,0	3,2	88	6,3	4,0	91	10,0	6,3	95	-	-	-
300	323,9	250	273	12	2,6	2,0	100	4,0	3,6	100	4,5	4,0	100	7,1	6,3	100	10,0	10,0	100	-	-	-
		200	219,1	24	2,6	2,0	85	4,0	2,6	(87)	4,5	3,6	97	7,1	6,3	99	10,0	8,0	100	-	-	-
		150	168,3	35	2,6	2,0	(85)	4,0	2,6	88	4,5	3,2	89	7,1	4,5	91	10,0	7,1	94	-	-	-
350	355,6	300	323,9	6	2,6	2,6	100	4,0	4,0	100	5,0	4,5	100	8,0	7,1	100	11,0	10,0	100	-	-	-
		250	273	14	2,6	2,0	97	4,0	3,6	100	5,0	4,0	100	8,0	6,3	100	11,0	10,0	100	-	-	-
		200	219,1	22	2,6	2,0	96	4,0	2,6	96	5,0	3,6	98	8,0	6,3	100	11,0	8,0	100	-	-	-
400	406,4	350	355,6	8	2,6	2,6	100	4,0	4,0	100	5,0	5,0	100	8,8	8,0	100	12,5	11,0	100	-	-	-
		300	323,9	13	2,6	2,6	99	4,0	4,0	100	5,0	4,5	100	8,8	7,1	100	12,5	10,0	100	-	-	-
		250	273	21	2,6	2,0	87	4,0	3,6	97	5,0	4,0	98	8,8	6,3	100	12,5	10,0	100	-	-	-
450	457	400	406,4	7	3,2	2,6	100	4,0	4,0	100	5,0	5,0	100	10,0	8,8	100	-	-	-	-	-	-
		350	355,6	14	3,2	2,6	99	4,0	4,0	99	5,0	5,0	100	10,0	8,0	100	-	-	-	-	-	-
		300	323,9	18	3,2	2,6	97	4,0	4,0	98	5,0	4,5	99	10,0	7,1	100	-	-	-	-	-	-
500	508	450	457	4	3,2	3,2	100	5,0	4,0	100	5,6	5,0	100	11,0	10,0	100	-	-	-	-	-	-
		400	406,4	10	3,2	2,6	100	5,0	4,0	100	5,6	5,0	100	11,0	8,8	100	-	-	-	-	-	-
		350	355,6	17	3,2	2,6	98	5,0	4,0	99	5,6	5,0	99	11,0	8,0	100	-	-	-	-	-	-
600	610	500	508	10	3,2	3,2	100	5,6	5,0	100	6,3	5,6	100	12,5	11,0	100	-	-	-	-	-	-
		450	457	15	3,2	3,2	98	5,6	4,0	100	6,3	5,0	100	12,5	10,0	100	-	-	-	-	-	-
		400	406,4	21	3,2	2,6	87	5,6	4,0	92	6,3	5,0	97	12,5	8,8	100	-	-	-	-	-	-
700	711	600	610	10	4,0	3,2	100	5,6	5,6	100	7,1	6,3	100	12,5	12,5	100	-	-	-	-	-	-
		500	508	15	4,0	3,2	96	5,6	5,0	99	7,1	5,6	100	12,5	11,0	100	-	-	-	-	-	-
		450	457	20	4,0	3,2	93	5,6	4,0	91	7,1	5,0	95	12,5	10,0	100	-	-	-	-	-	-
800	813	700	711	10	4,0	4,0	100	5,6	5,6	100	8,0	7,1	100	12,5	12,5	100	-	-	-	-	-	-
		600	610	15	4,0	3,2	87	5,6	5,6	99	8,0	6,3	100	12,5	12,5	100	-	-	-	-	-	-
		500	508	20	4,0	3,2	92	5,6	5,0	97	8,0	5,6	97	12,5	11,0	99	-	-	-	-	-	-
900	914	800	813	10	4,0	4,0	99	6,3	5,6	100	8,8	8,0	100	12,5	12,5	100	-	-	-	-	-	-
		700	711	15	4,0	4,0	98	6,3	5,6	99	8,8	7,1	100	12,5	12,5	100	-	-	-	-	-	-
		600	610	20	4,0	3,2	81	6,3	5,6	97	8,8	6,3	93	12,5	12,5	99	-	-	-	-	-	-
		900	914	10	4,0	4,0	99	6,3	6,3	100	10,0	8,8	100	12,5	12,5	100	-	-	-	-		

EN 10253-4:2008 (E)

					1			2			3			4			5			6		
DN	*D*	DN_1	D_1	α_{max}	*T*	T_1	*X*	*T*	T_1	*X*	*T*	T_1	*X*	*T*	T_1	*X*	*T*	T_1	*X*	*T*	T_1	*X*
		800	813	15	4,0	4,0	96	6,3	5,6	(98)	10,0	8,0	100	12,5	12,5	100	-	-	-	-	-	-
		700	711	20	4,0	4,0	95	6,3	5,6	97	10,0	7,1	(91)	12,5	12,5	98	-	-	-	-	-	-

Table C.4 — Pressure factors of eccentric reducers type A

					1			2			3			4			5			6		
DN	*D*	DN_1	D_1	α_{max}	*T*	T_1	*X*	*T*	T_1	*X*	*T*	T_1	*X*	*T*	T_1	*X*	*T*	T_1	*X*	*T*	T_1	*X*
20	26,9	15	21,3	15	1,6	1,6	100	-	-	-	-	-	-	2,0	2,0	100	3,2	3,2	100	4,0	4,0	100
25	33,7	20	26,9	13	1,6	1,6	100	-	-	-	-	-	-	2,3	2,0	100	3,2	3,2	100	4,5	4,0	100
		15	21,3	24	1,6	1,6	100	-	-	-	-	-	-	2,3	2,0	100	3,2	3,2	100	4,5	4,0	100
32	42,4	25	33,7	16	1,6	1,6	100	2,0	2,0	100	-	-	-	2,6	2,3	100	3,6	3,2	100	5,0	4,5	100
		20	26,9	30	1,6	1,6	99	-	-	-	-	-	-	2,6	2,0	100	3,6	3,2	100	5,0	4,0	100
		15	21,3	42	1,6	1,6	90	-	-	-	-	-	-	2,6	2,0	97	3,6	3,2	100	5,0	4,0	100
40	48,3	32	42,4	8	1,6	1,6	100	2,0	2,0	100	-	-	-	2,6	2,6	100	3,6	3,6	100	5,0	5,0	100
		25	33,7	19	1,6	1,6	100	2,0	2,0	100	-	-	-	2,6	2,3	100	3,6	3,2	100	5,0	4,5	100
		20	26,9	28	1,6	1,6	99	-	-	-	-	-	-	2,6	2,0	100	3,6	3,2	100	5,0	4,0	100
50	60,3	40	48,3	13	1,6	1,6	100	2,0	2,0	100	-	-	-	2,9	2,6	100	4,0	3,6	100	5,6	5,0	100
		32	42,4	20	1,6	1,6	100	2,0	2,0	100	-	-	-	2,9	2,6	100	4,0	3,6	100	5,6	5,0	100
		25	33,7	29	1,6	1,6	97	2,0	2,0	99	-	-	-	2,9	2,3	100	4,0	3,2	100	5,6	4,5	100
65	76,1	50	60,3	15	1,6	1,6	100	2,3	2,0	100	2,6	2,3	100	2,9	2,9	100	5,0	4,0	100	7,1	5,6	100
		40	48,3	27	1,6	1,6	97	2,3	2,0	99	-	-	-	2,9	2,6	100	5,0	3,6	100	7,1	5,0	100
		32	42,4	34	1,6	1,6	92	2,3	2,0	95	-	-	-	2,9	2,6	97	5,0	3,6	100	7,1	5,0	100
80	88,9	65	76,1	13	2,0	1,6	100	2,3	2,3	100	2,9	2,6	100	3,2	2,9	100	5,6	5,0	100	8,0	7,1	100
		50	60,3	30	2,0	1,6	95	2,3	2,0	96	2,9	2,3	98	3,2	2,9	99	5,6	4,0	100	8,0	5,6	100
		40	48,3	44	2,0	1,6	83	2,3	2,0	84	-	-	-	3,2	2,6	87	5,6	3,6	96	8,0	5,0	100
100	114,3	80	88,9	24	2,0	2,0	98	2,6	2,3	99	2,9	2,9	100	3,6	3,2	100	6,3	5,6	100	8,8	8,0	100
		65	76,1	37	2,0	1,6	(85)	2,6	2,3	90	2,9	2,6	91	3,6	2,9	93	6,3	5,0	100	8,8	7,1	100
		50	60,3	51	2,0	1,6	(72)	2,6	2,0	(74)	2,9	2,3	75	3,6	2,9	78	6,3	4,0	86	8,8	5,6	94
125	139,7	100	114,3	18	2,0	2,0	99	2,6	2,6	100	3,2	2,9	100	4,0	3,6	100	6,3	6,3	100	10,0	8,8	100
		80	88,9	35	2,0	2,0	89	2,6	2,3	90	3,2	2,9	92	4,0	3,2	93	6,3	5,6	98	10,0	8,0	100
		65	76,1	43	2,0	1,6	(81)	2,6	2,3	83	3,2	2,6	84	4,0	2,9	86	6,3	5,0	91	10,0	7,1	100
150	168,3	125	139,7	18	2,0	2,0	99	2,6	2,6	100	3,2	3,2	100	4,5	4,0	100	7,1	6,3	100	11,0	10,0	100
		100	114,3	34	2,0	2,0	89	2,6	2,6	90	3,2	2,9	91	4,5	3,6	94	7,1	6,3	98	11,0	8,8	100
		80	88,9	48	2,0	2,0	(67)	2,6	2,3	(76)	3,2	2,9	(77)	4,5	3,2	80	7,1	5,6	85	11,0	8,0	93
200	219,1	150	168,3	31	2,0	2,0	(80)	2,6	2,6	(87)	3,6	3,2	(87)	6,3	4,5	(90)	8,0	7,1	98	12,5	11,0	100
		125	139,7	45	2,0	2,0	(64)	2,6	2,6	(74)	3,6	3,2	(80)	6,3	4,0	(74)	8,0	6,3	(86)	12,5	10,0	93
		100	114,3	55	2,0	2,0	(46)	2,6	2,6	(53)	3,6	2,9	(64)	6,3	3,6	(71)	8,0	6,3	74	12,5	8,8	81
250	273	200	219,1	28	2,0	2,0	(75)	3,6	2,6	(75)	4,0	3,6	(86)	6,3	6,3	97	10,0	8,0	100	-	-	-
		150	168,3	48	2,0	2,0	(51)	3,6	2,6	(62)	4,0	3,2	(70)	6,3	4,5	(75)	10,0	7,1	(83)	-		

EN 10253-4:2008 (E)

					1			2			3			4			5			6		
DN	*D*	DN_1	D_1	α_{max}	*T*	T_1	*X*	*T*	T_1	*X*	*T*	T_1	*X*	*T*	T_1	*X*	*T*	T_1	*X*	*T*	T_1	*X*
		125	139,7	55	2,0	2,0	(41)	3,6	2,6	(57)	4,0	3,2	(60)	6,3	4,0	(69)	10,0	6,3	74	-	-	-
300	323,9	250	273	23	2,6	2,0	(72)	4,0	3,6	(87)	4,5	4,0	(89)	7,1	6,3	(99)	10,0	10,0	100	-	-	-
		200	219,1	44	2,6	2,0	(52)	4,0	2,6	(55)	4,5	3,6	(66)	7,1	6,3	(83)	10,0	8,0	(86)	-	-	-
		150	168,3	55	2,6	2,0	(43)	4,0	2,6	(55)	4,5	3,2	(58)	7,1	4,5	(69)	10,0	7,1	(72)	-	-	-
350	355,6	300	323,9	8	2,6	2,6	100	4,0	4,0	100	5,0	4,5	100	8,0	7,1	100	11,0	10,0	100	-	-	-
		250	273	25	2,6	2,0	68	4,0	3,6	90	5,0	4,0	86	8,0	6,3	(97)	11,0	10,0	100	-	-	-
		200	219,1	37	2,6	2,0	67	4,0	2,6	68	5,0	3,6	80	8,0	6,3	90	11,0	8,0	92	-	-	-
400	406,4	350	355,6	15	2,6	2,6	98	4,0	4,0	99	5,0	5,0	100	8,8	8,0	100	12,5	11,0	100	-	-	-
		300	323,9	24	2,6	2,6	81	4,0	4,0	94	5,0	4,5	91	8,8	7,1	(96)	12,5	10,0	100	-	-	-
		250	273	36	2,6	2,0	58	4,0	3,6	78	5,0	4,0	76	8,8	6,3	(83)	12,5	10,0	93	-	-	-
450	457	400	406,4	11	3,2	2,6	100	4,0	4,0	100	5,0	5,0	100	10,0	8,8	100	-	-	-	-	-	-
		350	355,6	24	3,2	2,6	71	4,0	4,0	93	5,0	5,0	96	10,0	8,0	(98)	-	-	-	-	-	-
		300	323,9	31	3,2	2,6	66	4,0	4,0	88	5,0	4,5	85	10,0	7,1	(85)	-	-	-	-	-	-
500	508	450	457	8	3,2	3,2	100	5,0	4,0	100	5,6	5,0	100	11,0	10,0	100	-	-	-	-	-	-
		400	406,4	18	3,2	2,6	80	5,0	4,0	90	5,6	5,0	99	11,0	8,8	100	-	-	-	-	-	-
		350	355,6	27	3,2	2,6	72	5,0	4,0	83	5,6	5,0	94	11,0	8,0	96	-	-	-	-	-	-
600	610	500	508	17	3,2	3,2	91	5,6	5,0	96	6,3	5,6	99	12,5	11,0	100	-	-	-	-	-	-
		450	457	27	3,2	3,2	75	5,6	4,0	70	6,3	5,0	76	12,5	10,0	(95)	-	-	-	-	-	-
		400	406,4	35	3,2	2,6	58	5,6	4,0	64	6,3	5,0	73	12,5	8,8	(83)	-	-	-	-	-	-
700	711	600	610	19	4,0	3,2	73	5,6	5,6	88	7,1	6,3	88	12,5	12,5	100	-	-	-	-	-	-
		500	508	34	4,0	3,2	54	5,6	5,0	66	7,1	5,6	64	12,5	11,0	(85)	-	-	-	-	-	-
		450	457	40	4,0	3,2	54	5,6	4,0	55	7,1	5,0	59	12,5	10,0	(79)	-	-	-	-	-	-
800	813	700	711	19	4,0	4,0	79	5,6	5,6	88	8,0	7,1	(87)	12,5	12,5	100	-	-	-	-	-	-
		600	610	34	4,0	3,2	48	5,6	5,6	66	8,0	6,3	62	12,5	12,5	(86)	-	-	-	-	-	-
		500	508	45	4,0	3,2	(47)	5,6	5,0	(57)	8,0	5,6	(54)	12,5	11,0	(78)	-	-	-	-	-	-
900	914	800	813	19	4,0	4,0	74	6,3	5,6	(77)	8,8	8,0	(87)	12,5	12,5	99	-	-	-	-	-	-
		700	711	34	4,0	4,0	(56)	6,3	5,6	60	8,8	7,1	(62)	12,5	12,5	(87)	-	-	-	-	-	-
		600	610	45	4,0	3,2	(41)	6,3	5,6	(53)	8,8	6,3	(51)	12,5	12,5	(76)	-	-	-	-	-	-
1000	1016	900	914	19	4,0	4,0	70	6,3	6,3	(83)	10,0	8,8	(86)	12,5	12,5	(99)	-	-	-	-	-	-
		800	813	34	4,0	4,0	(51)	6,3	5,6	(55)	10,0	8,0	(60)	12,5	12,5	(80)	-	-	-	-	-	-
		700	711	45	4,0	4,0	(41)	6,3	5,6	(51)	10,0	7,1	(50)	12,5	12,5	(75)	-	-	-	-	-	-

C.5 Caps

Table C.5 shows pressure factors of caps.

The calculation was done for an inside knuckle radius r < 0,15 x D and an inside spherical radius $R1$ = 0,8 x D. Smaller inside knuckle radii (r < 0,15 x D) or larger inside spherical radii ($R1$ > 0,8 x D) of the torispherical end may result in lower pressure factors, especially for small ratios of wall thickness to diameter with pressure factors less than 100 %.

For some dimensions no pressure factors are listed. In these cases the dimensions of the cap are outside the range of validity of the calculation procedures given in Annex B; the usability has to be checked for each case.

Table C.5 — Pressure factors of caps type A

		1		2		3		4		5		6	
DN	*D*	*T*	*X*	*T*	*X*	*T*	*X*	*T*	*X*	*T*	*X*	*T*	*X*
15	21,3	1,6	-	-	-	-	-	2	-	3,2	-	4	-
20	26,9	1,6	-	-	-	-	-	2	-	3,2	-	4	-
25	33,7	1,6	100	2	-	-	-	2,3	-	3,2	-	4,5	-
32	42,4	1,6	100	2	100	-	-	2,6	-	3,6	-	5	-
40	48,3	1,6	100	2	100	-	-	2,6	100	3,6	-	5	-
50	60,3	1,6	100	2	100	2,3	100	2,9	100	4	-	5,6	-
65	76,1	1,6	100	2,3	100	2,6	100	2,9	100	5	-	7,1	-
80	88,9	2,0	100	2,3	100	2,9	100	3,2	100	5,6	-	8	-
100	114,3	2,0	100	2,6	100	2,9	100	3,6	100	6,3	100	8,8	-
125	139,7	2,0	100	2,6	100	3,2	100	4	100	6,3	100	10	-
150	168,3	2,0	100	2,6	100	3,2	100	4,5	100	7,1	100	11	-
200	219,1	2,0	96	2,6	100	3,6	100	6,3	100	8	100	12,5	100
250	273,0	2,0	93	3,6	100	4	100	6,3	100	10	100	-	-
300	323,9	2,6	94	4	100	4,5	100	7,1	100	10	100	-	-
350	355,6	2,6	93	4	99	5	100	8	100	11	100	-	-
400	406,4	2,6	91	4	97	5	100	8,8	100	12,5	100	-	-
450	457	3,2	92	4	95	5	99	10	100	-	-	-	-
500	508	3,2	91	5	97	5,6	99	11	100	-	-	-	-
600	610	3,2	88	5,6	96	6,3	98	12,5	100	-	-	-	-
700	711	4,0	90	5,6	95	7,1	98	12,5	100	-	-	-	-
800	813	4,0	88	5,6	93	8	98	12,5	100	-	-	-	-
900	914	4,0	86	6,3	93	8,8	98	12,5	100	-	-	-	-
1000	1016	4,0	85	6,3	91	10	98	12,5	100	-	-	-	-

Annex D
(informative)

Wall thickness tables for fittings of type B

D.1 General

This annex lists wall thicknesses at the body of the fitting of elbows, tees, reducers and caps designated by their outside diameter for six wall thickness series and with the tolerances given in Table 9.

These wall thicknesses are calculated using the procedures given in Annex B. For the corrosion allowance 0 mm is used.

NOTE In general, corrosion allowances larger than 0 mm lead to smaller wall thicknesses at the body of elbows, tees and reducers.

For the definition of symbols see B.2 and the figures in Annex B.

Fittings with dimensions not listed in the tables of this annex, with a corrosion allowance larger than 0 mm or with other tolerances shall be designed in accordance with Annex B. Smaller wall thicknesses than listed in the tables are acceptable provided that they are calculated in accordance with Annex B.

D.2 Elbows

Table D.1 shows the wall thickness on the intrados of elbows of model 2D, 3D and 5D (indicated in second line of table) whose bending radii are given in Table A.1.

The wall thickness on the extrados of the elbows shall be the same as at the welding ends.

NOTE For the bending Radius R the distance from the centreline to the face of the elbow F from Table A.1 is used.

EN 10253-4:2008 (E)

Table D.1 — Wall thickness on the intrados of elbows type B

		1				2				3				4				5				6			
Model			2D	3D	5D		2D	3D	5D		2D	3D	5D		2D	3D	5D		2D	3D	5D		2D	3D	5D
DN	*D*	*T*	T_{int}	T_{int}	T_{int}	*T*	T_{int}	T_{int}	T_{int}	*T*	T_{int}	T_{int}	T_{int}	*T*	T_{int}	T_{int}	T_{int}	*T*	T_{int}	T_{int}	T_{int}	*T*	T_{int}	T_{int}	T_{int}
15	21,3	1,6	-	2,1	1,9	-	-	-	-	-	-	-	-	2,0	-	2,6	2,3	3,2	-	4,1	3,7	4,0	-	5,1	4,6
20	26,9	1,6	-	2,3	1,9	-	-	-	-	-	-	-	-	2,0	-	2,8	2,3	3,2	-	4,4	3,7	4,0	-	5,5	4,6
25	33,7	1,6	-	2,3	1,9	2,0	-	2,8	2,3	-	-	-	-	2,3	-	3,2	2,7	3,2	-	4,4	3,7	4,5	-	6,1	5,2
32	42,4	1,6	-	2,3	1,9	2,0	-	2,8	2,3	-	-	-	-	2,6	-	3,6	3,0	3,6	-	4,9	4,2	5,0	-	6,8	5,7
40	48,3	1,6	-	2,2	1,9	2,0	-	2,8	2,3	-	-	-	-	2,6	-	3,5	3,0	3,6	-	4,9	4,2	5,0	-	6,7	5,7
50	60,3	1,6	2,7	2,2	1,9	2,0	3,4	2,7	2,3	2,3	3,9	3,1	2,7	2,9	4,8	3,9	3,4	4,0	6,5	5,3	4,6	5,6	8,9	7,3	6,4
65	76,1	1,6	2,8	2,2	1,9	2,3	4,0	3,1	2,7	2,6	4,5	3,5	3,0	2,9	5,0	3,9	3,3	5,0	8,3	6,6	5,7	7,1	11,5	9,3	8,1
80	88,9	2,0	3,4	2,7	2,3	2,3	3,9	3,1	2,7	2,9	4,8	3,8	3,3	3,2	5,3	4,2	3,7	5,6	9,1	7,3	6,4	8,0	12,7	10,4	9,1
100	114,3	2,0	3,3	2,6	2,3	2,6	4,2	3,4	3,0	2,9	4,7	3,8	3,3	3,6	5,8	4,7	4,1	6,3	9,9	8,2	7,2	8,8	13,7	11,3	10,0
125	139,7	2,0	3,2	2,6	2,3	2,6	4,2	3,4	3,0	3,2	5,1	4,2	3,7	4,0	6,4	5,2	4,6	6,3	9,9	8,1	7,2	10,0	15,4	12,8	11,4
150	168,3	2,0	3,3	2,6	2,3	2,6	4,2	3,4	3,0	3,2	5,2	4,2	3,7	4,5	7,2	5,8	5,2	7,1	11,2	9,1	8,1	11,0	17,1	14,1	12,5
200	219,1	2,0	3,2	2,6	2,3	2,6	4,1	3,4	3,0	3,6	5,7	4,6	4,1	6,3	9,8	8,1	7,2	8,0	12,4	10,2	9,1	12,5	19,1	15,9	14,2
250	273	2,0	3,2	2,6	2,3	3,6	5,7	4,6	4,1	4,0	6,3	5,2	4,6	6,3	9,9	8,1	7,2	10,0	15,5	12,8	11,4	-	-	-	-
300	323,9	2,6	4,1	3,4	3,0	4,0	6,3	5,1	4,6	4,5	7,0	5,8	5,1	7,1	11,0	9,1	8,1	10,0	15,4	12,7	11,4	-	-	-	-
350	355,6	2,6	3,9	3,3	3,0	4,0	6,0	5,0	4,6	5,0	7,5	6,3	5,7	8,0	11,9	10,0	9,1	11,0	16,3	13,7	12,5	-	-	-	-
400	406,4	2,6	3,9	3,3	3,0	4,0	6,0	5,0	4,6	5,0	7,5	6,3	5,7	8,8	13,1	11,0	10,0	12,5	18,5	15,6	14,2	-	-	-	-
450	457	3,2	4,8	4,0	3,7	4,0	6,0	5,0	4,6	5,0	7,5	6,3	5,7	10,0	14,9	12,5	11,3	-	-	-	-	-	-	-	-
500	508	3,2	4,8	4,0	3,7	5,0	7,5	6,3	5,7	5,6	8,4	7,0	6,4	11,0	16,4	13,8	12,4	-	-	-	-	-	-	-	-
600	610	3,2	4,8	4,0	3,6	5,6	8,4	7,0	6,3	6,3	9,4	7,9	7,1	12,5	18,6	15,6	14,1	-	-	-	-	-	-	-	-
700	711	4,0	-	5,0	4,5	5,6	-	7,0	6,3	7,1	-	8,8	8,0	12,5	-	15,5	14,0	-	-	-	-	-	-	-	-
800	813	4,0	-	5,0	4,5	5,6	-	7,0	6,3	8,0	-	9,9	9,0	12,5	-	15,5	14,0	-	-	-	-	-	-	-	-
900	914	4,0	-	5,0	4,5	6,3	-	7,8	7,1	8,8	-	11,1	9,9	12,5	-	15,5	14,0	-	-	-	-	-	-	-	-
1000	1016	4,0	-	5,0	4,5	6,3	-	7,8	7,1	10,0	-	12,6	11,4	12,5	-	15,5	14,0	-	-	-	-	-	-	-	-

EN 10253-4:2008 (E)

D.3 Tees

Table D.2 shows the wall thickness at the body of equal tees and reducing tees. This data is applicable if one of the following two conditions applies:

1. The reinforcement is interior ($D_s = D$, $D_b = D_1$) and
   the crotch radius is less equal to ¾ of the height of the branch ($r_c \leq 0{,}75 \times (G - D/2)$) and
   the wall thickness at the crotch zone is at least the mean of the wall thicknesses of run and branch
   ($T_{c,min} \geq (T_{s,min} + T_{b,min}) / 2$) and
   dimensions F and G are as listed in Table A.2.

2. The reinforcement is at maximum half to the external ($D_s \leq D + (T_{s,min}-T)$, $D_b \leq D_1 + (T_{b,min}-T_1)$) and
   the crotch radius is less equal to ½ of the height of the branch ($r_c \leq 0{,}5 \times (G - D_s/2)$) and
   the wall thickness at the crotch zone is at least the mean of the wall thicknesses of run and branch
   ($T_{c,min} \geq (T_{s,min} + T_{b,min}) / 2$) and
   dimensions F and G are as listed in Table A.2.

In all other cases, e.g. when the reinforcement is completely to the external, the wall thicknesses shall be calculated in accordance with Annex B.

Smaller wall thicknesses than listed in Table D.2 are acceptable provided that they are calculated in accordance with Annex B, e.g. for smaller crotch radii or other ratios of the wall thicknesses of branch to run.

NOTE Table D.2 may be applied to branch welded tees with dimensions according to Table A.4, as the length F listed in Table A.4 is longer than the lengths F and G listed in Table A.2 and the criteria for the crotch radius established above is also satisfied. Table D.2 may not be applied to pulled tees according to Table A.3 as the lengths F and $G = D/2 + h$ are smaller than the lengths listed in Table A.2.

EN 10253-4:2008 (E)

Table D.2 — Wall thickness of tees type B

				1				2				3				4				5				6			
DN	*D*	DN_1	D_1	*T*	T_1	T_s	T_b	*T*	T_1	T_s	T_b	*T*	T_1	T_s	T_b	*T*	T_1	T_s	T_b	*T*	T_1	T_s	T_b	*T*	T_1	T_s	T_b
15	21,3	15	21,3	1,6	1,6	3,6	2,7	-	-	-	-	-	-	-	-	2,0	2,0	4,2	3,2	3,2	3,2	6,1	4,6	4,0	4,0	7,4	5,6
20	26,9	20	26,9	1,6	1,6	3,7	2,8	-	-	-	-	-	-	-	-	2,0	2,0	4,3	3,3	3,2	3,2	6,3	4,7	4,0	4,0	7,7	5,8
		15	21,3	1,6	1,6	3,4	2,5	-	-	-	-	-	-	-	-	2,0	2,0	4,0	3,0	3,2	3,2	5,7	4,3	4,0	4,0	6,7	5,1
25	33,7	25	33,7	1,6	1,6	3,9	3,0	2,0	2,0	4,7	3,5	-	-	-	-	2,3	2,3	5,2	3,9	3,2	3,2	6,7	5,0	4,5	4,5	8,7	6,5
		20	26,9	1,6	1,6	3,6	2,7	-	-	-	-	-	-	-	-	2,3	2,0	4,7	3,6	3,2	3,2	6,1	4,6	4,5	4,0	7,9	5,9
		15	21,3	1,6	1,6	3,4	2,5	-	-	-	-	-	-	-	-	2,3	2,0	4,4	3,3	3,2	3,2	5,6	4,2	4,5	4,0	7,3	5,5
32	42,4	32	42,4	1,6	1,6	4,2	3,1	2,0	2,0	4,9	3,7	-	-	-	-	2,6	2,6	6,0	4,5	3,6	3,6	7,7	5,8	5,0	5,0	9,9	7,4
		25	33,7	1,6	1,6	3,8	2,9	2,0	2,0	4,5	3,4	-	-	-	-	2,6	2,3	5,5	4,1	3,6	3,2	7,0	5,3	5,0	4,5	9,0	6,8
		20	26,9	1,6	1,6	3,6	2,7	-	-	-	-	-	-	-	-	2,6	2,0	5,1	3,8	3,6	3,2	6,5	4,9	5,0	4,0	8,4	6,3
		15	21,3	1,6	1,6	3,3	2,5	-	-	-	-	-	-	-	-	2,6	2,0	4,8	3,6	3,6	3,2	6,1	4,6	5,0	4,0	7,9	5,9
40	48,3	40	48,3	1,6	1,6	4,4	3,3	2,0	2,0	5,2	3,9	-	-	-	-	2,6	2,6	6,3	4,7	3,6	3,6	8,0	6,0	5,0	5,0	10,3	7,8
		32	42,4	1,6	1,6	4,2	3,1	2,0	2,0	4,9	3,7	-	-	-	-	2,6	2,6	6,0	4,5	3,6	3,6	7,7	5,8	5,0	5,0	9,8	7,4
		25	33,7	1,6	1,6	3,9	2,9	2,0	2,0	4,6	3,4	-	-	-	-	2,6	2,3	5,5	4,2	3,6	3,2	7,1	5,3	5,0	4,5	9,1	6,8
		20	26,9	1,6	1,6	3,6	2,7	-	-	-	-	-	-	-	-	2,6	2,0	5,2	3,9	3,6	3,2	6,6	5,0	5,0	4,0	8,5	6,4
50	60,3	50	60,3	1,6	1,6	4,4	3,3	2,0	2,0	5,2	3,9	2,3	2,3	5,8	4,4	2,9	2,9	6,9	5,2	4,0	4,0	8,8	6,6	5,6	5,6	11,4	8,6
		40	48,3	1,6	1,6	4,0	3,0	2,0	2,0	4,7	3,5	-	-	-	-	2,9	2,6	6,2	4,6	4,0	3,6	7,9	5,9	5,6	5,0	10,2	7,7
		32	42,4	1,6	1,6	3,7	2,8	2,0	2,0	4,4	3,3	-	-	-	-	2,9	2,6	5,8	4,3	4,0	3,6	7,4	5,5	5,6	5,0	9,5	7,2
		25	33,7	1,6	1,6	3,3	2,5	2,0	2,0	3,9	2,9	-	-	-	-	2,9	2,3	5,1	3,8	4,0	3,2	6,5	4,9	5,6	4,5	8,5	6,4
65	76,1	65	76,1	1,6	1,6	4,6	3,5	2,3	2,3	6,0	4,5	2,6	2,6	6,6	5,0	2,9	2,9	7,2	5,4	5,0	5,0	10,8	8,1	7,1	7,1	14,4	10,8
		50	60,3	1,6	1,6	4,1	3,1	2,3	2,0	5,3	4,0	2,6	2,3	5,8	4,4	2,9	2,9	6,3	4,8	5,0	4,0	9,6	7,2	7,1	5,6	12,5	9,4
		40	48,3	1,6	1,6	3,7	2,8	2,3	2,0	4,8	3,6	-	-	-	-	2,9	2,6	5,7	4,3	5,0	3,6	8,7	6,5	7,1	5,0	11,4	8,5
		32	42,4	1,6	1,6	3,4	2,6	2,3	2,0	4,5	3,4	-	-	-	-	2,9	2,6	5,4	4,0	5,0	3,6	8,1	6,1	7,1	5,0	10,7	8,0
80	88,9	80	88,9	2,0	2,0	5,6	4,2	2,3	2,3	6,2	4,7	2,9	2,9	7,4	5,5	3,2	3,2	7,9	6,0	5,6	5,6	12,1	9,1	8,0	8,0	16,5	12,4
		65	76,1	2,0	1,6	4,9	3,7	2,3	2,3	5,7	4,3	2,9	2,6	6,8	5,1	3,2	2,9	7,3	5,5	5,6	5,0	11,2	8,4	8,0	7,1	14,7	11,1
		50	60,3	2,0	1,6	4,6	3,4	2,3	2,0	5,1	3,8	2,9	2,3	6,0	4,5	3,2	2,9	6,5	4,9	5,6	4,0	9,9	7,5	8,0	5,6	13,1	9,8
		40	48,3	2,0	1,6	4,1	3,1	2,3	2,0	4,6	3,5	-	-	-	-	3,2	2,6	5,9	4,4	5,6	3,6	9,0	6,8	8,0	5,0	11,9	9,0
100	114,3	100	114,3	2,0	2,0	5,8	4,4	2,6	2,6	7,1	5,3	2,9	2,9	7,7	5,8	3,6	3,6	9,0	6,8	6,3	6,3	13,9	10,4	8,8	8,8	18,8	14,1
		80	88,9	2,0	2,0	5,1	3,9	2,6	2,3	6,2	4,7	2,9	2,9	6,8	5,1	3,6	3,2	7,9	6,0	6,3	5,6	12,2	9,1	8,8	8,0	15,8	11,9
		65	76,1	2,0	1,6	4,8	3,6	2,6	2,3	5,8	4,4	2,9	2,6	6,3	4,7	3,6	2,9	7,4	5,6	6,3	5,0	11,3	8,5	8,8	7,1	14,7	11,0
		50	60,3	2,0	1,6	4,3	3,2	2,6	2,0	5,2	3,9	2,9	2,3	5,6	4,2	3,6	2,9	6,6	5,0	6,3	4,0	10,2	7,7	8,8	5,6	13,2	9,9
			139,7	2,0	2,0	6,1	4,6	2,6	2,6	7,4	5,5	3,2	3,2	8,6	6,5	4,0	4,0	10,2	7,6	6,3	6,3	14,3	10,8	10,0	10,0	22,0	16,5
			114,3	2,0	2,0	5,5	4,1	2,6	2,6	6,6	5,0	3,2	2,9	7,7	5,8	4,0	3,6	9,1	6,9	6,3	6,3	12,9	9,7	10,0	8,		
			88,9	2,0	2,0	4,8	3,6	2,6	2,3	5,9	4,4	3,2	2,9	6,9	5,2	4,0	3,2	8,1	6,1	6,3	5,6	11,5	8,6	10,0	8,		

EN 10253-4:2008 (E)

				1				2				3				4				5				6			
DN	*D*	DN_1	D_1	*T*	T_1	T_s	T_b	*T*	T_1	T_s	T_b	*T*	T_1	T_s	T_b	*T*	T_1	T_s	T_b	*T*	T_1	T_s	T_b	*T*	T_1	T_s	T_b
		65	76,1	2,0	1,6	4,5	3,4	2,6	2,3	5,5	4,1	3,2	2,6	6,4	4,8	4,0	2,9	7,6	5,7	6,3	5,0	10,7	8,1	10,0	7,1	15,4	11,6
150	168,3	150	168,3	2,0	2,0	6,3	4,7	2,6	2,6	7,6	5,7	3,2	3,2	8,9	6,7	4,5	4,5	11,5	8,6	7,1	7,1	16,5	12,4	11,0	11,0	25,2	18,9
		125	139,7	2,0	2,0	5,7	4,3	2,6	2,6	6,9	5,2	3,2	3,2	8,1	6,1	4,5	4,0	10,4	7,8	7,1	6,3	14,7	11,1	11,0	10,0	21,0	15,7
		100	114,3	2,0	2,0	5,2	3,9	2,6	2,6	6,3	4,7	3,2	2,9	7,3	5,5	4,5	3,6	9,4	7,1	7,1	6,3	13,4	10,0	11,0	8,8	19,0	14,3
		80	88,9	2,0	2,0	4,6	3,5	2,6	2,3	5,6	4,2	3,2	2,9	6,5	4,9	4,5	3,2	8,4	6,3	7,1	5,6	12,0	9,0	11,0	8,0	17,0	12,8
200	219,1	200	219,1	2,0	2,0	6,6	5,0	2,6	2,6	8,1	6,1	3,6	3,6	10,2	7,7	6,3	6,3	15,7	11,8	8,0	8,0	19,4	14,5	12,5	12,5	30,2	22,6
		150	168,3	2,0	2,0	5,8	4,4	2,6	2,6	7,0	5,3	3,6	3,2	8,9	6,7	6,3	4,5	12,9	9,7	8,0	7,1	16,3	12,3	12,5	11,0	23,5	17,7
		125	139,7	2,0	2,0	5,3	4,0	2,6	2,6	6,4	4,8	3,6	3,2	8,2	6,1	6,3	4,0	12,4	9,3	8,0	6,3	15,0	11,2	12,5	10,0	21,5	16,2
		100	114,3	2,0	2,0	4,8	3,6	2,6	2,6	5,9	4,4	3,6	2,9	7,5	5,6	6,3	3,6	11,4	8,6	8,0	6,3	13,7	10,3	12,5	8,8	19,7	14,8
250	273	250	273	2,0	2,0	7,0	5,3	3,6	3,6	10,7	8,1	4,0	4,0	11,6	8,7	6,3	6,3	16,3	12,2	10,0	10,0	24,8	18,6	-	-	-	-
		200	219,1	2,0	2,0	6,2	4,7	3,6	2,6	8,8	6,6	4,0	3,6	10,3	7,8	6,3	6,3	14,5	10,9	10,0	8,0	20,8	15,6	-	-	-	-
		150	168,3	2,0	2,0	5,5	4,1	3,6	2,6	8,4	6,3	4,0	3,2	9,1	6,8	6,3	4,5	12,8	9,6	10,0	7,1	18,3	13,7	-	-	-	-
		125	139,7	2,0	2,0	5,0	3,8	3,6	2,6	7,8	5,8	4,0	3,2	8,4	6,3	6,3	4,0	11,9	8,9	10,0	6,3	16,9	12,7	-	-	-	-
300	323,9	300	323,9	2,6	2,6	8,8	6,6	4,0	4,0	12,1	9,1	4,5	4,5	13,2	9,9	7,1	7,1	18,6	13,9	10,0	10,0	25,2	18,9	-	-	-	-
		250	273	2,6	2,0	7,5	5,6	4,0	3,6	11,0	8,3	4,5	4,0	12,0	9,0	7,1	6,3	16,9	12,7	10,0	10,0	22,1	16,6	-	-	-	-
		200	219,1	2,6	2,0	7,2	5,4	4,0	2,6	9,6	7,2	4,5	3,6	10,8	8,1	7,1	6,3	15,1	11,4	10,0	8,0	19,8	14,8	-	-	-	-
		150	168,3	2,6	2,0	6,3	4,8	4,0	2,6	8,7	6,5	4,5	3,2	9,5	7,1	7,1	4,5	13,4	10,1	10,0	7,1	17,5	13,2	-	-	-	-
350	355,6	350	355,6	2,6	2,6	9,1	6,8	4,0	4,0	12,4	9,3	5,0	5,0	14,6	11,0	8,0	8,0	20,8	15,6	11,0	11,0	27,7	20,8	-	-	-	-
		300	323,9	2,6	2,6	8,6	6,4	4,0	4,0	11,8	8,8	5,0	4,5	13,7	10,3	8,0	7,1	19,3	14,5	11,0	10,0	25,2	18,9	-	-	-	-
		250	273	2,6	2,0	7,8	5,9	4,0	3,6	10,7	8,1	5,0	4,0	12,7	9,5	8,0	6,3	18,0	13,5	11,0	10,0	23,2	17,4	-	-	-	-
		200	219,1	2,6	2,0	7,0	5,3	4,0	2,6	9,7	7,3	5,0	3,6	11,4	8,6	8,0	6,3	16,3	12,2	11,0	8,0	20,8	15,6	-	-	-	-
400	406,4	400	406,4	2,6	2,6	9,3	7,0	4,0	4,0	12,7	9,5	5,0	5,0	14,9	11,2	8,8	8,8	23,6	17,7	12,5	12,5	33,2	24,9	-	-	-	-
		350	355,6	2,6	2,6	8,7	6,5	4,0	4,0	11,9	8,9	5,0	5,0	14,0	10,5	8,8	8,0	21,4	16,1	12,5	11,0	28,1	21,1	-	-	-	-
		300	323,9	2,6	2,6	8,3	6,2	4,0	4,0	11,3	8,5	5,0	4,5	13,3	10,0	8,8	7,1	20,4	15,3	12,5	10,0	26,8	20,1	-	-	-	-
		250	273	2,6	2,0	7,5	5,7	4,0	3,6	10,4	7,8	5,0	4,0	12,2	9,2	8,8	6,3	18,7	14,0	12,5	10,0	24,7	18,6	-	-	-	-
450	457	450	457	3,2	3,2	11,1	8,3	4,0	4,0	13,1	9,8	5,0	5,0	15,4	11,6	10,0	10,0	26,8	20,1	-	-	-	-	-	-	-	-
		400	406,4	3,2	2,6	9,7	7,3	4,0	4,0	12,2	9,2	5,0	5,0	14,4	10,8	10,0	8,8	24,1	18,1	-	-	-	-	-	-	-	-
		350	355,6	3,2	2,6	9,8	7,3	4,0	4,0	11,5	8,6	5,0	5,0	13,6	10,2	10,0	8,0	22,8	17,1	-	-	-	-	-	-	-	-
		300	323,9	3,2	2,6	9,3	7,0	4,0	4,0	11,0	8,2	5,0	4,5	12,9	9,7	10,0	7,1	21,7	16,3	-	-	-	-	-	-	-	-
500	508	500	508	3,2	3,2	11,4	8,6	5,0	5,0	15,8	11,9	5,6	5,6	17,2	12,9	11,0	11,0	29,5	22,2	-	-	-	-	-	-	-	-
		450	457	3,2	3,2	10,8	8,1	5,0	4,0	13,7	10,3	5,6	5,0	16,1	12,1	11,0	10,0	26,9	20,2	-	-	-	-	-	-	-	-
		400	406,4	3,2	2,6	10,1	7,6	5,0	4,0	14,0	10,5	5,6	5,0	15,2	11,4	11,0	8,8	25,4	19,0	-	-	-	-	-	-	-	-
			355,6	3,2	2,6	9,5	7,1	5,0	4,0	13,2	9,9	5,6	5,0	14,3	10,8	11,0	8,0	23,8	17,9	-	-	-	-	-	-		
			610	3,2	3,2	11,8	8,9	5,6	5,6	17,8	13,3	6,3	6,3	19,4	14,6	12,5	12,5	36,5	27,4	-	-	-	-	-	-		
			508	3,2	3,2	10,8	8,1	5,6	5,0	16,3	12,2	6,3	5,6	17,8	13,3	12,5	11,0	29,7	22,3	-	-	-	-	-	-		

EN 10253-4:2008 (E)

				1				2				3				4				5				6			
DN	*D*	DN_1	D_1	*T*	T_1	T_s	T_b	*T*	T_1	T_s	T_b	*T*	T_1	T_s	T_b	*T*	T_1	T_s	T_b	*T*	T_1	T_s	T_b	*T*	T_1	T_s	T_b
		450	457	3,2	3,2	10,2	7,7	5,6	4,0	14,9	11,2	6,3	5,0	16,8	12,6	12,5	10,0	28,2	21,2	-	-	-	-	-	-	-	-
		400	406,4	3,2	2,6	9,6	7,2	5,6	4,0	14,5	10,9	6,3	5,0	15,8	11,9	12,5	8,8	26,7	20,0	-	-	-	-	-	-	-	-
700	711	700	711	4,0	4,0	13,7	10,4	5,6	5,6	17,7	13,4	7,1	7,1	21,2	16,0	12,5	12,5	33,8	25,5	-	-	-	-	-	-	-	-
800	813	800	813	4,0	4,0	14,2	10,8	5,6	5,6	18,3	13,9	8,0	8,0	24,0	18,1	12,5	12,5	34,2	25,8	-	-	-	-	-	-	-	-
900	914	900	914	4,0	4,0	14,6	11,1	6,3	6,3	20,7	15,6	8,8	8,8	26,6	20,1	12,5	12,5	34,6	26,1	-	-	-	-	-	-	-	-
1000	1016	1000	1016	4,0	4,0	15,1	11,4	6,3	6,3	21,2	16,1	10,0	10,0	30,1	22,7	12,5	12,5	35,3	26,6	-	-	-	-	-	-	-	-

EN 10253-4:2008 (E)

D.4 Reducers

Tables D.3 to D.6 show the wall thicknesses of concentric and eccentric reducers of type B.

The data listed is applicable if all of the following conditions apply:

— The semi angle of the reducer is not larger than the values listed in Tables D.3 to D.6.

— Each of the lengths L_2 and L_4 at the ends of the reducer is at least 10 % of the total length L listed in Table A.5.

— At the transitions between the cylindrical sections and the conical sections the inside and outside surfaces shall merge smoothly.

— The length L'_2 between a knuckle and the major end of a reducer is at least

$$L'_2 \geq 0.5 \cdot \sqrt{(D - T_2) \cdot T_2} \qquad \text{(D.1)}$$

or, alternatively, at least $L'_{2,\min}$ given by formula (B.50). The wall thickness of such a knuckle shall be at least T_2.

— The transition between the cylindrical sections and the conical section at the minor end may be curved too. The wall thickness of the knuckle shall be at least the maximum of $T_{3,\min}$ and $T_{4,\min}$.

If a wall thickness is shown in brackets the length required at the end of the reducer is larger than 10 % of the total length L listed in Table A.5. In this case the length shall be at least $L_{2,\min}$ or $L_{4,\min}$ given by (B.61) or (B.62) or the wall thickness shall be increased in accordance with (B.63) or (B.64).

Smaller wall thicknesses than listed in Tables D.3 to D.6 are acceptable provided that they are calculated in accordance with Annex B. e.g. for smaller semi angles α.

NOTE 1 For the calculation of the wall thickness tolerances of T, T_2 and T_3 the diameter D should be used. For the calculation of the wall thickness tolerance of T_1 and T_4 the diameter D_1 should be used.

NOTE 2 Table D.3 to D.6 are not applicable for straight reducers.

Table D.3 — Wall thickness of concentric reducers type B — wall thickness series 1 to 3

					1					2					3				
DN	D	DN_1	D_1	α_{max}	T	T_1	T_2	T_3	T_4	T	T_1	T_2	T_3	T_4	T	T_1	T_2	T_3	T_4
20	26,9	15	21,3	8	1,6	1,6	1,6	1,6	1,6	-	-	-	-	-	-	-	-	-	-
25	33,7	20	26,9	7	1,6	1,6	1,6	1,6	1,6	-	-	-	-	-	-	-	-	-	-
		15	21,3	12	1,6	1,6	1,6	1,6	1,6	-	-	-	-	-	-	-	-	-	-
32	42,4	25	33,7	9	1,6	1,6	1,6	1,6	1,6	2,0	2,0	2,0	2,0	2,0	-	-	-	-	-
		20	26,9	15	1,6	1,6	1,6	1,6	1,6	-	-	-	-	-	-	-	-	-	-
		15	21,3	19	1,6	1,6	1,6	1,6	1,6	-	-	-	-	-	-	-	-	-	-
40	48,3	32	42,4	6	1,6	1,6	1,6	1,6	1,6	2,0	2,0	2,0	2,0	2,0	-	-	-	-	-
		25	33,7	10	1,6	1,6	1,6	1,6	1,6	2,0	2,0	2,0	2,0	2,0	-	-	-	-	-
		20	26,9	16	1,6	1,6	1,6	1,6	1,6	-	-	-	-	-	-	-	-	-	-
50	60,3	40	48,3	7	1,6	1,6	1,6	1,6	1,6	2,0	2,0	2,0	2,0	2,0	-	-	-	-	-
		32	42,4	11	1,6	1,6	1,6	1,6	1,6	2,0	2,0	2,0	2,0	2,0	-	-	-	-	-
		25	33,7	16	1,6	1,6	1,6	1,6	1,6	2,0	2,0	2,0	2,0	2,0	-	-	-	-	-
65	76,1	50	60,3	9	1,6	1,6	1,6	1,6	1,6	2,3	2,0	2,3	2,3	2,0	2,6	2,3	2,6	2,6	2,3
		40	48,3	15	1,6	1,6	1,6	1,6	1,6	2,3	2,0	2,3	2,3	2,0	-	-	-	-	-
		32	42,4	18	1,6	1,6	1,6	1,7	1,6	2,3	2,0	2,3	2,3	2,0	-	-	-	-	-
80	88,9	65	76,1	7	2,0	1,6	2,0	1,9	1,6	2,3	2,3	2,3	2,3	2,3	2,9	2,6	2,9	2,9	2,6
		50	60,3	16	2,0	1,6	2,0	2,0	1,6	2,3	2,0	2,3	2,3	2,0	2,9	2,3	2,9	2,9	2,3
		40	48,3	22	2,0	1,6	2,0	2,1	1,6	2,3	2,0	2,3	2,4	2,0	-	-	-	-	-
100	114,3	80	88,9	13	2,0	2,0	2,0	2,0	2,0	2,6	2,3	2,6	2,6	2,3	2,9	2,9	2,9	2,9	2,9
		65	76,1	18	2,0	1,6	2,0	2,1	1,6	2,6	2,3	2,6	2,7	2,3	2,9	2,6	2,9	3,0	2,6
		50	60,3	26	2,0	1,6	2,0	2,1	1,6	2,6	2,0	2,6	2,7	2,0	2,9	2,3	2,9	3,0	2,3
125	139,7	100	114,3	10	2,0	2,0	2,0	2,0	2,0	2,6	2,6	2,6	2,6	2,6	3,2	2,9	3,2	3,2	2,9
		80	88,9	20	2,0	2,0	2,0	2,1	2,0	2,6	2,3	2,6	2,7	2,3	3,2	2,9	3,2	3,3	2,9
		65	76,1	25	2,0	1,6	2,0	2,1	1,6	2,6	2,3	2,6	2,7	2,3	3,2	2,6	3,2	3,3	2,6
150	168,3	125	139,7	9	2,0	2,0	2,0	2,0	2,0	2,6	2,6	2,6	2,6	2,6	3,2	3,2	3,2	3,2	3,2
		100	114,3	19	2,0	2,0	2,0	2,1	2,0	2,6	2,6	2,6	2,7	2,6	3,2	2,9	3,2	3,3	2,9
		80	88,9	27	2,0	2,0	2,0	2,2	2,0	2,6	2,3	2,6	2,8	2,3	3,2	2,9	3,2	3,4	2,9
200	219,1	150	168,3	18	2,0	2,0	2,0	2,1	2,0	2,6	2,6	2,6	2,7	2,6	3,6	3,2	3,6	3,7	3,2
		125	139,7	27	2,0	2,0	2,0	2,2	2,0	2,6	2,6	2,6	2,8	2,6	3,6	3,2	3,6	3,8	3,2
		100	114,3	33	2,0	2,0	(2,1)	2,3	2,0	2,6	2,6	2,6	2,9	2,6	3,6	2,9	3,6	4,0	2,9
250	273	200	219,1	16	2,0	2,0	2,0	2,1	2,0	3,6	2,6	3,6	3,3	2,6	4,0	3,6	4,0	4,1	3,6
		150	168,3	30	2,0	2,0	(2,1)	2,3	2,0	3,6	2,6	3,6	4,0	(2,8)	4,0	3,2	4,0		

EN 10253-4:2008 (E)

					1					2					3				
DN	D	DN_1	D_1	α_{max}	T	T_1	T_2	T_3	T_4	T	T_1	T_2	T_3	T_4	T	T_1	T_2	T_3	T_4
		125	139,7	36	2,0	2,0	(2,4)	2,4	2,0	3,6	2,6	3,6	4,2	2,6	4,0	3,2	4,0	4,6	3,2
300	323,9	250	273	12	2,6	2,0	2,6	2,4	2,0	4,0	3,6	4,0	4,0	3,6	4,5	4,0	4,5	4,5	4,0
		200	219,1	24	2,6	2,0	2,6	2,8	(2,4)	4,0	2,6	4,0	4,1	(3,1)	4,5	3,6	4,5	4,7	3,6
		150	168,3	35	2,6	2,0	(2,9)	3,0	2,1	4,0	2,6	4,0	4,6	2,7	4,5	3,2	4,5	5,1	3,2
350	355,6	300	323,9	6	2,6	2,6	2,6	2,6	2,6	4,0	4,0	4,0	4,0	4,0	5,0	4,5	5,0	5,0	4,5
		250	273	14	2,6	2,0	2,6	2,7	2,1	4,0	3,6	4,0	4,1	3,6	5,0	4,0	5,0	5,1	4,0
		200	219,1	22	2,6	2,0	2,6	2,8	2,0	4,0	2,6	4,0	4,2	2,7	5,0	3,6	5,0	5,2	3,6
400	406,4	350	355,6	8	2,6	2,6	2,6	2,6	2,6	4,0	4,0	4,0	4,0	4,0	5,0	5,0	5,0	5,0	5,0
		300	323,9	13	2,6	2,6	2,6	2,7	2,6	4,0	4,0	4,0	4,1	4,0	5,0	4,5	5,0	5,1	4,5
		250	273	21	2,6	2,0	2,6	2,8	2,3	4,0	3,6	4,0	4,2	3,6	5,0	4,0	5,0	5,2	4,0
450	457	400	406,4	7	3,2	2,6	3,2	3,0	2,6	4,0	4,0	4,0	4,0	4,0	5,0	5,0	5,0	5,0	5,0
		350	355,6	14	3,2	2,6	3,2	3,3	2,7	4,0	4,0	4,0	4,1	4,0	5,0	5,0	5,0	5,1	5,0
		300	323,9	18	3,2	2,6	3,2	3,3	2,7	4,0	4,0	4,0	4,1	4,0	5,0	4,5	5,0	5,1	4,5
500	508	450	457	4	3,2	3,2	3,2	3,2	3,2	5,0	4,0	5,0	4,5	4,0	5,6	5,0	5,6	5,6	5,0
		400	406,4	10	3,2	2,6	3,2	3,3	2,6	5,0	4,0	5,0	5,0	4,0	5,6	5,0	5,6	5,6	5,0
		350	355,6	17	3,2	2,6	3,2	3,3	2,6	5,0	4,0	5,0	5,1	4,0	5,6	5,0	5,6	5,7	5,0
600	610	500	508	10	3,2	3,2	3,2	3,3	3,2	5,6	5,0	5,6	5,6	5,0	6,3	5,6	6,3	6,3	5,6
		450	457	15	3,2	3,2	3,2	3,3	3,2	5,6	4,0	5,6	5,4	4,1	6,3	5,0	6,3	6,4	5,0
		400	406,4	21	3,2	2,6	3,2	3,4	3,0	5,6	4,0	5,6	5,8	4,4	6,3	5,0	6,3	6,6	5,0
700	711	600	610	10	4,0	3,2	4,0	3,7	3,2	5,6	5,6	5,6	5,6	5,6	7,1	6,3	7,1	6,8	6,3
		500	508	15	4,0	3,2	4,0	4,1	3,4	5,6	5,0	5,6	5,7	5,0	7,1	5,6	7,1	7,2	5,6
		450	457	20	4,0	3,2	4,0	4,2	3,5	5,6	4,0	5,6	5,8	4,4	7,1	5,0	7,1	7,3	5,3
800	813	700	711	10	4,0	4,0	4,0	4,1	4,0	5,6	5,6	5,6	5,7	5,6	8,0	7,1	8,0	8,0	7,1
		600	610	15	4,0	3,2	4,0	4,1	3,7	5,6	5,6	5,6	5,7	5,6	8,0	6,3	8,0	7,8	6,3
		500	508	20	4,0	3,2	4,0	4,2	3,5	5,6	5,0	5,6	5,8	5,0	8,0	5,6	8,0	8,3	5,7
900	914	800	813	10	4,0	4,0	4,0	4,1	4,0	6,3	5,6	6,3	6,3	5,6	8,8	8,0	8,8	8,8	8,0
		700	711	15	4,0	4,0	4,0	4,1	4,0	6,3	5,6	6,3	6,4	5,6	8,8	7,1	8,8	8,9	7,1
		600	610	20	4,0	3,2	4,0	4,2	3,9	6,3	5,6	6,3	6,5	5,6	8,8	6,3	8,8	8,9	6,9
1000	1016	900	914	10	4,0	4,0	4,0	4,1	4,0	6,3	6,3	6,3	6,4	6,3	10,0	8,8	10,0	9,8	8,8
		800	813	15	4,0	4,0	4,0	4,1	4,2	6,3	5,6	6,3	6,4	(5,7)	10,0	8,0	10,0	10,0	8,0
		700	711	20	4,0	4,0	4,0	4,2	4,2	6,3	5,6	6,3	6,6	5,6	10,0	7,1	10,0	10,5	(7,7)

Table D.4 — Wall thickness of concentric reducers type B — wall thickness series 4 to 6

					4					5					6				
DN	D	DN_1	D_1	α_{max}	T	T_1	T_2	T_3	T_4	T	T_1	T_2	T_3	T_4	T	T_1	T_2	T_3	T_4
20	26,9	15	21,3	8	2,0	2,0	2,0	2,0	2,0	3,2	3,2	3,2	3,1	3,2	4,0	4,0	4,0	3,8	4,0
25	33,7	20	26,9	7	2,3	2,0	2,3	2,3	2,0	3,2	3,2	3,2	3,1	3,2	4,5	4,0	4,5	4,4	4,0
		15	21,3	12	2,3	2,0	2,3	2,3	2,0	3,2	3,2	3,2	3,1	3,2	4,5	4,0	4,5	4,3	4,0
32	42,4	25	33,7	9	2,6	2,3	2,6	2,6	2,3	3,6	3,2	3,6	3,5	3,2	5,0	4,5	5,0	4,8	4,5
		20	26,9	15	2,6	2,0	2,6	2,6	2,0	3,6	3,2	3,6	3,5	3,2	5,0	4,0	5,0	4,7	4,0
		15	21,3	19	2,6	2,0	2,6	2,6	2,0	3,6	3,2	3,6	3,5	3,2	5,0	4,0	5,0	4,7	4,0
40	48,3	32	42,4	6	2,6	2,6	2,6	2,6	2,6	3,6	3,6	3,6	3,6	3,6	5,0	5,0	5,0	4,9	5,0
		25	33,7	10	2,6	2,3	2,6	2,6	2,3	3,6	3,2	3,6	3,5	3,2	5,0	4,5	5,0	4,8	4,5
		20	26,9	16	2,6	2,0	2,6	2,6	2,0	3,6	3,2	3,6	3,5	3,2	5,0	4,0	5,0	4,8	4,0
50	60,3	40	48,3	7	2,9	2,6	2,9	2,9	2,6	4,0	3,6	4,0	4,0	3,6	5,6	5,0	5,6	5,5	5,0
		32	42,4	11	2,9	2,6	2,9	2,9	2,6	4,0	3,6	4,0	3,9	3,6	5,6	5,0	5,6	5,4	5,0
		25	33,7	16	2,9	2,3	2,9	2,9	2,3	4,0	3,2	4,0	3,9	3,2	5,6	4,5	5,6	5,4	4,5
65	76,1	50	60,3	9	2,9	2,9	2,9	2,9	2,9	5,0	4,0	5,0	4,9	4,0	7,1	5,6	7,1	6,8	5,6
		40	48,3	15	2,9	2,6	2,9	2,9	2,6	5,0	3,6	5,0	4,9	3,6	7,1	5,0	7,1	6,8	5,0
		32	42,4	18	2,9	2,6	2,9	2,9	2,6	5,0	3,6	5,0	4,9	3,6	7,1	5,0	7,1	6,8	5,0
80	88,9	65	76,1	7	3,2	2,9	3,2	3,2	2,9	5,6	5,0	5,6	5,5	5,0	8,0	7,1	8,0	7,8	7,1
		50	60,3	16	3,2	2,9	3,2	3,2	2,9	5,6	4,0	5,6	5,5	4,0	8,0	5,6	8,0	7,6	5,6
		40	48,3	22	3,2	2,6	3,2	3,3	2,6	5,6	3,6	5,6	5,5	3,6	8,0	5,0	8,0	7,6	5,0
100	114,3	80	88,9	13	3,6	3,2	3,6	3,6	3,2	6,3	5,6	6,3	6,2	5,6	8,8	8,0	8,8	8,5	8,0
		65	76,1	18	3,6	2,9	3,6	3,6	2,9	6,3	5,0	6,3	6,2	5,0	8,8	7,1	8,8	8,5	7,1
		50	60,3	26	3,6	2,9	3,6	3,7	2,9	6,3	4,0	6,3	6,3	4,0	8,8	5,6	8,8	8,6	5,6
125	139,7	100	114,3	10	4,0	3,6	4,0	4,0	3,6	6,3	6,3	6,3	6,2	6,3	10,0	8,8	10,0	9,7	8,8
		80	88,9	20	4,0	3,2	4,0	4,1	3,2	6,3	5,6	6,3	6,3	5,6	10,0	8,0	10,0	9,7	8,0
		65	76,1	25	4,0	2,9	4,0	4,1	2,9	6,3	5,0	6,3	6,3	5,0	10,0	7,1	10,0	9,7	7,1
150	168,3	125	139,7	9	4,5	4,0	4,5	4,5	4,0	7,1	6,3	7,1	7,0	6,3	11,0	10,0	11,0	10,7	10,0
		100	114,3	19	4,5	3,6	4,5	4,6	3,6	7,1	6,3	7,1	7,1	6,3	11,0	8,8	11,0	10,7	8,8
		80	88,9	27	4,5	3,2	4,5	4,7	3,2	7,1	5,6	7,1	7,2	5,6	11,0	8,0	11,0	10,9	8,0
200	219,1	150	168,3	18	6,3	4,5	6,3	5,9	4,5	8,0	7,1	8,0	8,0	7,1	12,5	11,0	12,5	12,2	11,0
		125	139,7	27	6,3	4,0	6,3	6,5	4,0	8,0	6,3	8,0	8,2	6,3	12,5	10,0	12,5	12,5	10,0
		100	114,3	33	6,3	3,6	6,3	6,8	3,6	8,0	6,3	8,0	8,5	6,3	12,5	8,8	12,5	12,8	8,8
250	273	200	219,1	16	6,3	6,3	6,3	6,3	6,3	10,0	8,0	10,0	9,9	8,0	-	-	-	-	-
		150	168,3	30	6,3	4,5	6,3	6,7	4,5	10,0	7,1	10,0	10,4	7,1	-	-	-		

EN 10253-4:2008 (E)

					4					5					6				
DN	D	DN_1	D_1	α_{max}	T	T_1	T_2	T_3	T_4	T	T_1	T_2	T_3	T_4	T	T_1	T_2	T_3	T_4
		125	139,7	36	6,3	4,0	6,3	7,1	4,0	10,0	6,3	10,0	10,8	6,3	-	-	-	-	-
300	323,9	250	273	12	7,1	6,3	7,1	7,1	6,3	10,0	10,0	10,0	9,9	10,0	-	-	-	-	-
		200	219,1	24	7,1	6,3	7,1	7,3	6,3	10,0	8,0	10,0	10,2	8,0	-	-	-	-	-
		150	168,3	35	7,1	4,5	7,1	7,9	4,5	10,0	7,1	10,0	10,9	7,1	-	-	-	-	-
350	355,6	300	323,9	6	8,0	7,1	8,0	7,8	7,1	11,0	10,0	11,0	10,9	10,0	-	-	-	-	-
		250	273	14	8,0	6,3	8,0	8,0	6,3	11,0	10,0	11,0	10,9	10,0	-	-	-	-	-
		200	219,1	22	8,0	6,3	8,0	8,2	6,3	11,0	8,0	11,0	11,1	8,0	-	-	-	-	-
400	406,4	350	355,6	8	8,8	8,0	8,8	8,8	8,0	12,5	11,0	12,5	12,4	11,0	-	-	-	-	-
		300	323,9	13	8,8	7,1	8,8	8,8	7,1	12,5	10,0	12,5	12,4	10,0	-	-	-	-	-
		250	273	21	8,8	6,3	8,8	9,0	6,3	12,5	10,0	12,5	12,6	10,0	-	-	-	-	-
450	457	400	406,4	7	10,0	8,8	10,0	9,8	8,8	-	-	-	-	-	-	-	-	-	-
		350	355,6	14	10,0	8,0	10,0	10,0	8,0	-	-	-	-	-	-	-	-	-	-
		300	323,9	18	10,0	7,1	10,0	10,1	7,1	-	-	-	-	-	-	-	-	-	-
500	508	450	457	4	11,0	10,0	11,0	11,0	10,0	-	-	-	-	-	-	-	-	-	-
		400	406,4	10	11,0	8,8	11,0	10,9	8,8	-	-	-	-	-	-	-	-	-	-
		350	355,6	17	11,0	8,0	11,0	11,1	8,0	-	-	-	-	-	-	-	-	-	-
600	610	500	508	10	12,5	11,0	12,5	12,4	11,0	-	-	-	-	-	-	-	-	-	-
		450	457	15	12,5	10,0	12,5	12,5	10,0	-	-	-	-	-	-	-	-	-	-
		400	406,4	21	12,5	8,8	12,5	12,8	8,8	-	-	-	-	-	-	-	-	-	-
700	711	600	610	10	12,5	12,5	12,5	12,5	12,5	-	-	-	-	-	-	-	-	-	-
		500	508	15	12,5	11,0	12,5	12,5	11,0	-	-	-	-	-	-	-	-	-	-
		450	457	20	12,5	10,0	12,5	12,7	10,0	-	-	-	-	-	-	-	-	-	-
800	813	700	711	10	12,5	12,5	12,5	12,5	12,5	-	-	-	-	-	-	-	-	-	-
		600	610	15	12,5	12,5	12,5	12,6	12,5	-	-	-	-	-	-	-	-	-	-
		500	508	20	12,5	11,0	12,5	12,8	11,0	-	-	-	-	-	-	-	-	-	-
900	914	800	813	10	12,5	12,5	12,5	12,5	12,5	-	-	-	-	-	-	-	-	-	-
		700	711	15	12,5	12,5	12,5	12,6	12,5	-	-	-	-	-	-	-	-	-	-
		600	610	20	12,5	12,5	12,5	12,8	12,5	-	-	-	-	-	-	-	-	-	-
1000	1016	900	914	10	12,5	12,5	12,5	12,5	12,5	-	-	-	-	-	-	-	-	-	-
		800	813	15	12,5	12,5	12,5	12,6	12,5	-	-	-	-	-	-	-	-	-	-
		700	711	20	12,5	12,5	12,5	12,8	12,5	-	-	-	-	-	-	-	-	-	-

Table D.5 — Wall thickness of eccentric reducers type B — wall thickness series 1 to 3

					1					2					3				
DN	D	DN_1	D_1	α_{max}	T	T_1	T_2	T_3	T_4	T	T_1	T_2	T_3	T_4	T	T_1	T_2	T_3	T_4
20	26,9	15	21,3	15	1,6	1,6	1,6	1,6	1,6	-	-	-	-	-	-	-	-	-	-
25	33,7	20	26,9	13	1,6	1,6	1,6	1,6	1,6	-	-	-	-	-	-	-	-	-	-
		15	21,3	24	1,6	1,6	1,6	1,6	1,6	-	-	-	-	-	-	-	-	-	-
32	42,4	25	33,7	16	1,6	1,6	1,6	1,6	1,6	2,0	2,0	2,0	2,0	2,0	-	-	-	-	-
		20	26,9	30	1,6	1,6	1,6	1,7	1,6	-	-	-	-	-	-	-	-	-	-
		15	21,3	42	1,6	1,6	1,6	1,9	1,6	-	-	-	-	-	-	-	-	-	-
40	48,3	32	42,4	8	1,6	1,6	1,6	1,6	1,6	2,0	2,0	2,0	2,0	2,0	-	-	-	-	-
		25	33,7	19	1,6	1,6	1,6	1,6	1,6	2,0	2,0	2,0	2,0	2,0	-	-	-	-	-
		20	26,9	28	1,6	1,6	1,6	1,7	1,6	-	-	-	-	-	-	-	-	-	-
50	60,3	40	48,3	13	1,6	1,6	1,6	1,6	1,6	2,0	2,0	2,0	2,0	2,0	-	-	-	-	-
		32	42,4	20	1,6	1,6	1,6	1,7	1,6	2,0	2,0	2,0	2,0	2,0	-	-	-	-	-
		25	33,7	29	1,6	1,6	1,6	1,7	1,6	2,0	2,0	2,0	2,1	2,0	-	-	-	-	-
65	76,1	50	60,3	15	1,6	1,6	1,6	1,6	1,6	2,3	2,0	2,3	2,3	2,0	2,6	2,3	2,6	2,6	2,3
		40	48,3	27	1,6	1,6	1,6	1,7	1,6	2,3	2,0	2,3	2,4	2,0	-	-	-	-	-
		32	42,4	34	1,6	1,6	1,6	1,8	1,6	2,3	2,0	2,3	2,5	2,0	-	-	-	-	-
80	88,9	65	76,1	13	2,0	1,6	2,0	1,9	1,6	2,3	2,3	2,3	2,3	2,3	2,9	2,6	2,9	2,9	2,6
		50	60,3	30	2,0	1,6	2,0	2,2	1,6	2,3	2,0	2,3	2,5	2,0	2,9	2,3	2,9	3,1	2,3
		40	48,3	44	2,0	1,6	2,0	2,5	1,6	2,3	2,0	2,3	2,8	2,0	-	-	-	-	-
100	114,3	80	88,9	24	2,0	2,0	2,0	2,1	2,0	2,6	2,3	2,6	2,7	2,3	2,9	2,9	2,9	3,0	2,9
		65	76,1	37	2,0	1,6	2,0	2,3	(1,8)	2,6	2,3	2,6	3,0	2,3	2,9	2,6	2,9	3,3	2,6
		50	60,3	51	2,0	1,6	(2,4)	2,8	1,6	2,6	2,0	(2,9)	3,5	2,0	2,9	2,3	(3,1)	3,9	2,3
125	139,7	100	114,3	18	2,0	2,0	2,0	2,1	2,0	2,6	2,6	2,6	2,7	2,6	3,2	2,9	3,2	3,3	2,9
		80	88,9	35	2,0	2,0	2,0	2,3	2,0	2,6	2,3	2,6	2,9	2,3	3,2	2,9	3,2	3,6	2,9
		65	76,1	43	2,0	1,6	(2,2)	2,5	1,6	2,6	2,3	2,6	3,2	2,3	3,2	2,6	3,2	3,9	2,6
150	168,3	125	139,7	18	2,0	2,0	2,0	2,1	2,0	2,6	2,6	2,6	2,7	2,6	3,2	3,2	3,2	3,3	3,2
		100	114,3	34	2,0	2,0	2,0	2,3	2,0	2,6	2,6	2,6	2,9	2,6	3,2	2,9	3,2	3,6	2,9
		80	88,9	48	2,0	2,0	(2,6)	2,7	2,0	2,6	2,3	(3,1)	3,4	2,3	3,2	2,9	(3,5)	4,2	2,9
200	219,1	150	168,3	31	2,0	2,0	2,0	2,3	(2,6)	2,6	2,6	2,6	2,9	(2,9)	3,6	3,2	3,6	4,0	(3,6)
		125	139,7	45	2,0	2,0	(2,7)	2,7	(2,5)	2,6	2,6	(3,2)	3,4	(2,9)	3,6	3,2	(3,9)	4,5	(3,6)
		100	114,3	55	2,0	2,0	(3,3)	3,3	2,0	2,6	2,6	(3,9)	3,9	2,6	3,6	2,9	(4,8)	5,3	(3,0)
250	273	200	219,1	28	2,0	2,0	2,0	2,2	(2,8)	3,6	2,6	3,6	3,5	(3,6)	4,0	3,6	4,0	4,3	(4,2)
		150	168,3	48	2,0	2,0	(3,1)	3,1	(2,6)	3,6	2,6	(4,5)	4,8	(3,9)	4,0	3,2	(4,8)		

EN 10253-4:2008 (E)

					1					2					3				
DN	D	DN_1	D_1	α_{max}	T	T_1	T_2	T_3	T_4	T	T_1	T_2	T_3	T_4	T	T_1	T_2	T_3	T_4
		125	139,7	55	2,0	2,0	(3,6)	3,6	2,0	3,6	2,6	(5,2)	5,4	(3,1)	4,0	3,2	(5,5)	5,9	(3,3)
300	323,9	250	273	23	2,6	2,0	2,6	2,5	(3,1)	4,0	3,6	4,0	4,2	(4,1)	4,5	4,0	4,5	4,7	(4,5)
		200	219,1	44	2,6	2,0	(3,6)	3,6	(3,5)	4,0	2,6	(4,6)	4,9	(4,6)	4,5	3,6	(5,0)	5,6	(5,1)
		150	168,3	55	2,6	2,0	(4,5)	4,5	2,6	4,0	2,6	(5,9)	6,0	(3,7)	4,5	3,2	(6,4)	6,7	(3,9)
350	355,6	300	323,9	8	2,6	2,6	2,6	2,6	2,6	4,0	4,0	4,0	4,0	4,0	5,0	4,5	5,0	5,0	4,5
		250	273	25	2,6	2,0	2,6	2,8	3,0	4,0	3,6	4,0	4,3	4,0	5,0	4,0	5,0	5,3	4,6
		200	219,1	37	2,6	2,0	(3,2)	3,2	2,9	4,0	2,6	(4,1)	4,7	3,8	5,0	3,6	5,0	5,8	4,3
400	406,4	350	355,6	15	2,6	2,6	2,6	2,7	2,7	4,0	4,0	4,0	4,1	4,0	5,0	5,0	5,0	5,1	5,0
		300	323,9	24	2,6	2,6	2,6	2,8	3,3	4,0	4,0	4,0	4,2	4,2	5,0	4,5	5,0	5,3	(4,9)
		250	273	36	2,6	2,0	(3,2)	3,2	3,3	4,0	3,6	(4,3)	4,7	4,4	5,0	4,0	5,0	5,8	5,1
450	457	400	406,4	11	3,2	2,6	3,2	3,0	2,6	4,0	4,0	4,0	4,1	4,0	5,0	5,0	5,0	5,0	5,0
		350	355,6	24	3,2	2,6	3,2	3,4	3,8	4,0	4,0	4,0	4,3	4,2	5,0	5,0	5,0	5,3	5,0
		300	323,9	31	3,2	2,6	(3,4)	3,6	3,9	4,0	4,0	4,0	4,5	4,4	5,0	4,5	5,0	5,5	5,1
500	508	450	457	8	3,2	3,2	3,2	3,2	3,2	5,0	4,0	5,0	4,5	4,0	5,6	5,0	5,6	5,6	5,0
		400	406,4	18	3,2	2,6	3,2	3,3	3,3	5,0	4,0	5,0	5,1	4,5	5,6	5,0	5,6	5,8	5,0
		350	355,6	27	3,2	2,6	3,2	3,5	3,6	5,0	4,0	5,0	5,4	4,8	5,6	5,0	5,6	6,0	5,1
600	610	500	508	17	3,2	3,2	3,2	3,3	3,6	5,6	5,0	5,6	5,7	5,2	6,3	5,6	6,3	6,4	5,7
		450	457	27	3,2	3,2	(3,4)	3,5	4,5	5,6	4,0	5,6	5,8	5,8	6,3	5,0	6,3	6,8	6,5
		400	406,4	35	3,2	2,6	(4,2)	4,2	4,1	5,6	4,0	(5,9)	6,5	6,1	6,3	5,0	(6,4)	7,2	6,6
700	711	600	610	19	4,0	3,2	4,0	3,8	4,9	5,6	5,6	5,6	5,8	6,4	7,1	6,3	7,1	7,0	(7,3)
		500	508	34	4,0	3,2	(4,8)	4,8	5,9	5,6	5,0	(6,0)	6,4	7,4	7,1	5,6	7,1	8,0	8,5
		450	457	40	4,0	3,2	(5,5)	5,5	5,3	5,6	4,0	(6,8)	6,8	7,0	7,1	5,0	(7,9)	8,5	8,2
800	813	700	711	19	4,0	4,0	4,0	4,2	5,3	5,6	5,6	5,6	5,8	(6,4)	8,0	7,1	8,0	8,2	(8,0)
		600	610	34	4,0	3,2	(5,0)	5,0	6,7	5,6	5,6	(6,2)	6,4	(8,7)	8,0	6,3	8,0	8,7	(10,3)
		500	508	45	4,0	3,2	(6,3)	6,3	5,6	5,6	5,0	(7,9)	7,9	7,4	8,0	5,6	(9,9)	10,3	(9,8)
900	914	800	813	19	4,0	4,0	4,0	4,2	(5,7)	6,3	5,6	6,3	6,5	(7,4)	8,8	8,0	8,8	9,0	(9,1)
		700	711	34	4,0	4,0	(5,2)	5,2	(6,8)	6,3	5,6	(7,0)	7,2	(9,6)	8,8	7,1	8,8	9,9	(11,5)
		600	610	45	4,0	3,2	(6,6)	6,6	6,4	6,3	5,6	(8,9)	8,9	(9,2)	8,8	6,3	(11,0)	11,1	(11,8)
1000	1016	900	914	19	4,0	4,0	4,0	4,2	(6,1)	6,3	6,3	6,3	6,5	(7,9)	10,0	8,8	10,0	10,0	(10,4)
		800	813	34	4,0	4,0	(5,4)	5,4	(7,3)	6,3	5,6	(7,2)	7,2	(10,7)	10,0	8,0	10,0	11,3	(13,5)
		700	711	45	4,0	4,0	(6,8)	6,8	(6,5)	6,3	5,6	(9,2)	9,2	(9,3)	10,0	7,1	(12,5)	12,8	(13,3)

Table D.6 — Wall thickness of eccentric reducers type B — wall thickness series 4 to 6

					4					5					6				
DN	D	DN_1	D_1	α_{max}	T	T_1	T_2	T_3	T_4	T	T_1	T_2	T_3	T_4	T	T_1	T_2	T_3	T_4
20	26,9	15	21,3	15	2,0	2,0	2,0	2,0	2,0	3,2	3,2	3,2	3,0	3,2	4,0	4,0	4,0	3,7	4,0
25	33,7	20	26,9	13	2,3	2,0	2,3	2,3	2,0	3,2	3,2	3,2	3,1	3,2	4,5	4,0	4,5	4,2	4,0
		15	21,3	24	2,3	2,0	2,3	2,3	2,0	3,2	3,2	3,2	3,1	3,2	4,5	4,0	4,5	4,1	4,0
32	42,4	25	33,7	16	2,6	2,3	2,6	2,6	2,3	3,6	3,2	3,6	3,5	3,2	5,0	4,5	5,0	4,7	4,5
		20	26,9	30	2,6	2,0	2,6	2,6	2,0	3,6	3,2	3,6	3,5	3,2	5,0	4,0	5,0	4,7	4,0
		15	21,3	42	2,6	2,0	2,6	2,8	2,0	3,6	3,2	3,6	3,7	3,2	5,0	4,0	5,0	4,8	4,0
40	48,3	32	42,4	8	2,6	2,6	2,6	2,6	2,6	3,6	3,6	3,6	3,5	3,6	5,0	5,0	5,0	4,9	5,0
		25	33,7	19	2,6	2,3	2,6	2,6	2,3	3,6	3,2	3,6	3,5	3,2	5,0	4,5	5,0	4,7	4,5
		20	26,9	28	2,6	2,0	2,6	2,7	2,0	3,6	3,2	3,6	3,6	3,2	5,0	4,0	5,0	4,8	4,0
50	60,3	40	48,3	13	2,9	2,6	2,9	2,9	2,6	4,0	3,6	4,0	3,9	3,6	5,6	5,0	5,6	5,4	5,0
		32	42,4	20	2,9	2,6	2,9	2,9	2,6	4,0	3,6	4,0	3,9	3,6	5,6	5,0	5,6	5,3	5,0
		25	33,7	29	2,9	2,3	2,9	3,0	2,3	4,0	3,2	4,0	4,0	3,2	5,6	4,5	5,6	5,4	4,5
65	76,1	50	60,3	15	2,9	2,9	2,9	2,9	2,9	5,0	4,0	5,0	4,9	4,0	7,1	5,6	7,1	6,7	5,6
		40	48,3	27	2,9	2,6	2,9	3,0	2,6	5,0	3,6	5,0	5,0	3,6	7,1	5,0	7,1	6,8	5,0
		32	42,4	34	2,9	2,6	2,9	3,1	2,6	5,0	3,6	5,0	5,1	3,6	7,1	5,0	7,1	6,9	5,0
80	88,9	65	76,1	13	3,2	2,9	3,2	3,2	2,9	5,6	5,0	5,6	5,5	5,0	8,0	7,1	8,0	7,7	7,1
		50	60,3	30	3,2	2,9	3,2	3,4	2,9	5,6	4,0	5,6	5,6	4,0	8,0	5,6	8,0	7,7	5,6
		40	48,3	44	3,2	2,6	3,2	3,8	2,6	5,6	3,6	5,6	6,1	3,6	8,0	5,0	8,0	8,2	5,0
100	114,3	80	88,9	24	3,6	3,2	3,6	3,7	3,2	6,3	5,6	6,3	6,3	5,6	8,8	8,0	8,8	8,5	8,0
		65	76,1	37	3,6	2,9	3,6	4,0	2,9	6,3	5,0	6,3	6,6	5,0	8,8	7,1	8,8	8,9	7,1
		50	60,3	51	3,6	2,9	3,6	4,7	2,9	6,3	4,0	6,3	7,5	4,0	8,8	5,6	8,8	9,8	5,6
125	139,7	100	114,3	18	4,0	3,6	4,0	4,0	3,6	6,3	6,3	6,3	6,2	6,3	10,0	8,8	10,0	9,7	8,8
		80	88,9	35	4,0	3,2	4,0	4,4	3,2	6,3	5,6	6,3	6,7	5,6	10,0	8,0	10,0	10,1	8,0
		65	76,1	43	4,0	2,9	4,0	4,7	2,9	6,3	5,0	6,3	7,1	5,0	10,0	7,1	10,0	10,6	7,1
150	168,3	125	139,7	18	4,5	4,0	4,5	4,5	4,0	7,1	6,3	7,1	7,0	6,3	11,0	10,0	11,0	10,7	10,0
		100	114,3	34	4,5	3,6	4,5	4,9	3,6	7,1	6,3	7,1	7,5	6,3	11,0	8,8	11,0	11,2	8,8
		80	88,9	48	4,5	3,2	4,5	5,7	3,2	7,1	5,6	7,1	8,5	5,6	11,0	8,0	11,0	12,3	8,0
200	219,1	150	168,3	31	6,3	4,5	6,3	6,2	(5,1)	8,0	7,1	8,0	8,4	7,1	12,5	11,0	12,5	12,7	11,0
		125	139,7	45	6,3	4,0	6,3	7,6	(5,1)	8,0	6,3	8,0	9,4	6,3	12,5	10,0	12,5	13,9	10,0
		100	114,3	55	6,3	3,6	(6,8)	8,7	(4,2)	8,0	6,3	8,0	10,7	6,3	12,5	8,8	12,5	15,5	8,8
250	273	200	219,1	28	6,3	6,3	6,3	6,7	6,3	10,0	8,0	10,0	10,3	8,0	-	-	-	-	-
		150	168,3	48	6,3	4,5	(6,4)	8,0	(5,5)	10,0	7,1	10,0	12,2	(7,5)	-	-	-		

EN 10253-4:2008 (E)

					4					5					6				
DN	D	DN_1	D_1	α_{max}	T	T_1	T_2	T_3	T_4	T	T_1	T_2	T_3	T_4	T	T_1	T_2	T_3	T_4
		125	139,7	55	6,3	4,0	(7,4)	8,9	(4,4)	10,0	6,3	10,0	13,4	6,3	-	-	-	-	-
300	323,9	250	273	23	7,1	6,3	7,1	7,3	6,3	10,0	10,0	10,0	10,2	10,0	-	-	-	-	-
		200	219,1	44	7,1	6,3	7,1	8,7	(6,8)	10,0	8,0	10,0	11,8	(8,6)	-	-	-	-	-
		150	168,3	55	7,1	4,5	(8,5)	10,1	(5,1)	10,0	7,1	(10,5)	13,7	7,1	-	-	-	-	-
350	355,6	300	323,9	8	8,0	7,1	8,0	7,8	7,1	11,0	10,0	11,0	10,9	10,0	-	-	-	-	-
		250	273	25	8,0	6,3	8,0	8,3	(6,4)	11,0	10,0	11,0	11,3	10,0	-	-	-	-	-
		200	219,1	37	8,0	6,3	8,0	9,0	6,3	11,0	8,0	11,0	12,2	8,0	-	-	-	-	-
400	406,4	350	355,6	15	8,8	8,0	8,8	8,8	8,0	12,5	11,0	12,5	12,4	11,0	-	-	-	-	-
		300	323,9	24	8,8	7,1	8,8	9,1	(7,4)	12,5	10,0	12,5	12,7	10,0	-	-	-	-	-
		250	273	36	8,8	6,3	8,8	9,9	(7,4)	12,5	10,0	12,5	13,7	10,0	-	-	-	-	-
450	457	400	406,4	11	10,0	8,8	10,0	9,9	8,8	-	-	-	-	-	-	-	-	-	-
		350	355,6	24	10,0	8,0	10,0	10,3	(8,1)	-	-	-	-	-	-	-	-	-	-
		300	323,9	31	10,0	7,1	10,0	10,8	(8,2)	-	-	-	-	-	-	-	-	-	-
500	508	450	457	8	11,0	10,0	11,0	10,9	10,0	-	-	-	-	-	-	-	-	-	-
		400	406,4	18	11,0	8,8	11,0	11,1	8,8	-	-	-	-	-	-	-	-	-	-
		350	355,6	27	11,0	8,0	11,0	11,5	8,2	-	-	-	-	-	-	-	-	-	-
600	610	500	508	17	12,5	11,0	12,5	12,6	11,0	-	-	-	-	-	-	-	-	-	-
		450	457	27	12,5	10,0	12,5	13,1	(10,4)	-	-	-	-	-	-	-	-	-	-
		400	406,4	35	12,5	8,8	12,5	13,9	(10,3)	-	-	-	-	-	-	-	-	-	-
700	711	600	610	19	12,5	12,5	12,5	12,7	12,5	-	-	-	-	-	-	-	-	-	-
		500	508	34	12,5	11,0	12,5	13,8	(12,5)	-	-	-	-	-	-	-	-	-	-
		450	457	40	12,5	10,0	12,5	14,6	(11,9)	-	-	-	-	-	-	-	-	-	-
800	813	700	711	19	12,5	12,5	12,5	12,7	12,5	-	-	-	-	-	-	-	-	-	-
		600	610	34	12,5	12,5	12,5	13,9	(14,0)	-	-	-	-	-	-	-	-	-	-
		500	508	45	12,5	11,0	(13,2)	15,5	(13,0)	-	-	-	-	-	-	-	-	-	-
900	914	800	813	19	12,5	12,5	12,5	12,7	12,5	-	-	-	-	-	-	-	-	-	-
		700	711	34	12,5	12,5	12,5	13,9	(13,8)	-	-	-	-	-	-	-	-	-	-
		600	610	45	12,5	12,5	(13,8)	15,6	(14,9)	-	-	-	-	-	-	-	-	-	-
1000	1016	900	914	19	12,5	12,5	12,5	12,8	12,5	-	-	-	-	-	-	-	-	-	-
		800	813	34	12,5	12,5	12,5	14,0	(15,2)	-	-	-	-	-	-	-	-	-	-
		700	711	45	12,5	12,5	(14,3)	15,7	(15,0)	-	-	-	-	-	-	-	-	-	-

D.5 Caps

Table D.7 shows wall thicknesses at the body of caps of type B.

The calculation was done for an inside knuckle radius r = 0,15 x D and an inside spherical radius $R1$ = 0,8 x D. Smaller inside knuckle radii (r < 0,15 x D) or larger inside spherical radii ($R1$ > 0,8 x D) of the torispherical end may result in larger wall thicknesses, especially for small ratios of wall thickness to diameter showing increased wall thicknesses at the body of the cap.

For caps with an inside knuckle radius r < 0,15 x D or with an inside spherical radius $R1$ > 0,8 x D the wall thickness at the body of the cap shall be calculated in accordance with Annex B.

For some dimensions no wall thicknesses at the body of the cap are listed. In these cases the dimensions of the cap are outside the range of validity of the calculation procedures given in Annex B.

Smaller wall thicknesses than listed in Table D.7 are acceptable provided that they are calculated in accordance with Annex B.

Table D.7 — Wall thickness of caps

		1		2		3		4		5		6	
DN	*D*	*T*	T_c	*T*	T_c	*T*	T_c	*T*	T_c	*T*	T_c	*T*	T_c
15	21,3	1,6	-	-	-	-	-	2	-	3,2	-	4	-
20	26,9	1,6	-	-	-	-	-	2	-	3,2	-	4	-
25	33,7	1,6	1,6	2	-	-	-	2,3	-	3,2	-	4,5	-
32	42,4	1,6	1,6	2	2	-	-	2,6	-	3,6	-	5	-
40	48,3	1,6	1,6	2	2	-	-	2,6	2,6	3,6	-	5	-
50	60,3	1,6	1,6	2	2	2,3	2,3	2,9	2,9	4	-	5,6	-
65	76,1	1,6	1,6	2,3	2,3	2,6	2,6	2,9	2,9	5	-	7,1	-
80	88,9	2	2	2,3	2,3	2,9	2,9	3,2	3,2	5,6	-	8	-
100	114,3	2	2	2,6	2,6	2,9	2,9	3,6	3,6	6,3	6,3	8,8	-
125	139,7	2	2	2,6	2,6	3,2	3,2	4	4	6,3	6,3	10	-
150	168,3	2	2	2,6	2,6	3,2	3,2	4,5	4,5	7,1	7,1	11	-
200	219,1	2	2,1	2,6	2,6	3,6	3,6	6,3	6,3	8	8	12,5	12,5
250	273	2	2,2	3,6	3,6	4	4	6,3	6,3	10	10	-	-
300	323,9	2,6	2,8	4	4	4,5	4,5	7,1	7,1	10	10	-	-
350	355,6	2,6	2,8	4	4,1	5	5	8	8	11	11	-	-
400	406,4	2,6	2,9	4	4,1	5	5	8,8	8,8	12,5	12,5	-	-
450	457	3,2	3,5	4	4,2	5	5,1	10	10	-	-	-	-
500	508	3,2	3,5	5	5,2	5,6	5,7	11	11	-	-	-	-
600	610	3,2	3,6	5,6	5,8	6,3	6,4	12,5	12,5	-	-	-	-
700	711	4	4,4	5,6	5,9	7,1	7,2	12,5	12,5	-	-	-	-
800	813	4	4,5	5,6	6	8	8,1	12,5	12,5	-	-	-	-
900	914	4	4,5	6,3	6,7	8,8	9	12,5	12,5	-	-	-	-
1000	1016	4	4,6	6,3	6,8	10	10,3	12,5	12,5	-	-	-	-

EN 10253-4:2008 (E)

Annex ZA
(informative)

Relationship between this European Standard and the Essential Requirements of the EU Directive 97/23/EC

This European Standard has been prepared under a mandate given to CEN by the European Commission and the European Free Trade Association to provide a means of conforming to Essential Requirement(s) (ESR) of the Pressure Equipment Directive 97/23/EC by providing technical solutions for specific ESRs.

Once this standard is cited in the Official Journal of the European Communities under that Directive and has been implemented as a national standard in at least one Member State, compliance with the clauses of this standard given in Table ZA.1 confers, within the limits of the scope of this standard, a presumption of conformity with the corresponding Essential Requirements of that Directive and associated EFTA regulations.

Table ZA.1 — Correspondence between this European Standard and Directive 97/23/EC

Clauses/sub-clauses of this EN	Pressure Equipment Directive 97/23/EC Annex I	Content
8.2.2	3.1.2	Welding
14.9.1	3.1.3	NDT-personnel
9.3	4.1a	Appropriate material properties
8.2 and 10	4.1d	Suitable for the processing procedures
12	4.3	Documentation

WARNING: Other requirements and other EU Directives may be applicable to the product(s) falling within the scope of this European Standard.

Bibliography

[1] EN ISO 8493, *Metallic materials - Tube - Drift-expanding test (ISO 8493:1998)*

[2] EN ISO 15607:2004, *Specification and qualification of welding procedures for metallic materials - General rules (ISO 15607:2003)*

[3] EN 10020:2000, *Definitions and classification of grades of steel*

[4] EN 10052:1993, *Vocabulary of heat treatment terms for ferrous products*

[5] EN 10079:2007, *Definitions of steel products*

[6] EN 10088-1, *Stainless steels – Part 1: List of stainless steels*

[7] EN ISO 2566-1, *Steel - Conversion of elongation values - Part 1: Carbon and low alloy steels (ISO 2566-1:1984)*

[8] ISO 3419, *Non-alloy and alloy steel butt-welding fittings*

[9] ISO 5251, *Stainless steel butt-welding fittings*

Send your requirement

Send a drawing, product list, size, material grade, standard, schedule or wall thickness, testing and project document requirements.

EMAIL	info@lkpiping.com
WHATSAPP	+86 139 0327 9556
TECHNICAL RESOURCES	www.lkpiping.com/technical/

RESPONSE AND DOCUMENT COORDINATION

Initial enquiries are answered within 24 hours, including weekends, by email or WhatsApp. Drawing review, material/standard matching and project document requirements can be discussed and organized with the buyer. Third-party inspection can be buyer-nominated or coordinated on request.

ADDRESS

Longtan Industrial Zone, Yanta Road, Yanshan County, Cangzhou City,
Hebei Province, China