LeKe Piping

COMPLETE TECHNICAL REFERENCE / MSS SP-75-2019

HIGH-STRENGTH BUTT-WELDING FITTINGS

Requirements, material properties, inspection and dimensions for wrought fittings.

REFERENCE CONTENT

01 / REQUIREMENTS

Scope, pressure rating, proof testing and manufacturing

02 / MATERIAL & QUALITY

Chemistry, tensile properties, heat treatment, NDE and QC

03 / DIMENSIONS & SUPPLEMENTS

Fitting dimensions, tolerances, annex and supplementary requirements

LEKE PIPING / INDUSTRIAL FITTINGS REFERENCE

Confirm final dimensions, materials, inspection and project requirements before ordering.

ENGLISH

2019 EDITION

LeKe Piping

Reference navigation

Click a group to jump directly to the corresponding technical section.

01

Scope and pressure ratings

Coverage, application and pressure-rating basis

PAGE 005 >

02

Definitions and design proof testing

Definitions, assembly qualification and proof-test records

PAGE 006 >

03

Materials and chemical composition

Material forms, weldability and chemistry limits

PAGE 009 >

04

Tensile, heat treatment and toughness

Mechanical properties, heat treatment and impact testing

PAGE 011 >

05

Dimensions, tolerances and manufacture

Fitting dimensions, end preparation and manufacturing controls

PAGE 013 >

06

NDE, quality control and marking

Inspection, CMTR, records and permanent marking

PAGE 015 >

The following page retains the detailed source contents for clause-level lookup.

LeKe Piping

Tables, figures and supplements

Click a group to jump directly to the corresponding technical section.

07

End preparation and test figures

Bevels, unequal walls, bend specimens and guided-bend jig

PAGE 019 >

08

Chemical and tensile tables

Maximum chemical-element limits and tensile requirements

PAGE 022 >

09

Dimensional tables

Tolerances, elbows, tees, caps and reducers

PAGE 023 >

10

Annex A - referenced standards

Referenced standards and applicable edition dates

PAGE 035 >

11

Appendix X1 - supplementary requirements

Purchaser-invoked supplementary requirements

PAGE 038 >

12

Appendices X2 and X3

Underbead cracking test and segmenting recommendations

PAGE 041 >

All retained tables, figures, notes and supplementary clauses remain in their original sequence.

TABLE OF CONTENTS

SECTION

1 SCOPE 1
2 PRESSURE RATINGS 1
3 DEFINITIONS 2
4 DESIGN PROOF-TEST 3
5 HYDROSTATIC TESTING 5
6 MATERIALS 5
7 CHEMICAL COMPOSITION 6
8 TENSILE PROPERTIES 7
9 HEAT TREATMENT 8
10 TRANSVERSE GUIDED-WELD BEND TESTS (MOVED TO SR-2) 8
11 NOTCH-TOUGHNESS PROPERTIES 8
12 FITTING DIMENSIONS 9
13 TOLERANCES FOR WELDING FITTINGS 9
14 MANUFACTURE 10
15 NONDESTRUCTIVE EXAMINATION (NDE) 11
16 QUALITY CONTROL 12
17 MARKING 14

TABLE

1 Maximum Limit of Chemical Elements 18
2 Tensile Requirements 18
3 Tolerances 19
4 Dimensions of Elbows 20
5 Dimensions of Reducing Elbows 21
6 Dimensions of Straight Tees 24
7 Dimensions of Reducing Outlet Tees 25
8 Dimensions of Caps 28
9 Dimensions of Reducers 29

FIGURE

1 Recommended Bevel for Wall Thicknesses (T) at End of Fitting, 0.75 in. or Less 15
2 Recommended Bevel for Wall Thicknesses (T) at End of Fitting, Greater than 0.75 in. 15
3 (a,b,c) Acceptable Design for Unequal Wall Thickness 16
4 Traverse Face and Root-Bend Test Specimens 16
5 Guided-Bend Test Jig 17
X2-1 Longitudinal-Bead Underbead Cracking Test Specimen 37

ANNEX

A Referenced Standards and Applicable Dates 31

APPENDIX

X1 Supplementary Requirements 34
X2 Longitudinal-Bead Underbead Cracking Test 37
X3 Recommendations for Segmenting 38

HIGH-STRENGTH, WROUGHT, BUTT-WELDING FITTINGS

1. SCOPE

1.1 This Standard Practice covers factory-made, seamless and electric welded carbon and low-alloy steel, butt-welding fittings for use in high pressure gas and oil transmission and distribution systems; including pipelines, compressor stations, metering and regulating stations, and mains.

1.2 This Standard Practice governs dimensions, tolerances, ratings, testing, materials, chemical and tensile properties, heat treatment, notch toughness properties, manufacture, inspection, certification, and marking for high-strength, butt-welding fittings NPS 60 and smaller. Dimensional requirements for NPS 14 and smaller are provided by reference to ASME B16.9.

1.3 The term "welding fittings" applies to butt-welding fittings such as elbows, segments of elbows, reducing elbows, caps, tees, single or multiple-outlet extruded headers, reducers, and extensions and transition sections(1). Hot induction bends are outside the scope of this Standard Practice. Girth weld requirements are outside the scope of this Standard Practice and are covered by the applicable ASME B31 Code for Pressure Piping and/or customer specifications.

1.4 Fittings may be made to special dimensions, sizes, shapes, and tolerances, or of wrought materials other than those covered by this Standard Practice by agreement between the manufacturer and the purchaser. When such fittings meet all other stipulations of this Standard Practice they shall be considered as being in partial compliance therewith, providing they are appropriately marked.

1.4.1 Fittings manufactured in partial compliance, as provided in Section 1.4, shall be identified with "Part" following the respective grade designation.

1.5 Fittings specified as "PSL2" will automatically invoke the additional requirements of SR-24 which are intended to be complementary to PSL2 line pipe in the API 5L Specification.

2. PRESSURE RATINGS

2.1 The allowable internal-pressure ratings for pipe fittings designed in accordance with this Standard Practice shall be calculated as for straight seamless pipe (or welded pipe with a joint efficiency factor of 1.0) of equivalent grade, diameter and wall thickness in accordance with the rules established in the applicable sections of ASME B31 Codes.

2.2 All fittings produced in accordance with this Standard Practice shall be designed to withstand a field hydrostatic test pressure, after installation, at a pressure level equivalent to that required to develop a hoop stress equal to the specified minimum yield strength for pipe of equivalent grade and wall thickness based on Barlow's Formula, without failure, leakage, or impairment of serviceability. Barlow's formula is defined as:

$$P = \frac{2St}{D}$$

Where:

P = internal design pressure, psig;

S = specified minimum yield strength of the mating pipe, psi;

t = nominal wall thickness of the mating pipe, inches;

D = outside diameter of the mating pipe, inches.

NOTE: (1) Lengths of extensions and transitions as agreed upon by purchaser and manufacturer.

2.3 By agreement between the manufacturer and the purchaser, fittings may be tested at a higher pressure providing the manufacturer is notified of the test pressure to be used.

2.4 The design shall take into consideration performance requirements prescribed above as well as additional factors dictated by the shape of the part. These considerations may require some portion of formed fittings to be thicker than the mating pipe wall.

2.5 The design of fittings shall be established by one of the following methods:

2.5.1 Mathematical analyses contained in nationally recognized pressure vessel or piping codes (e.g. ASME B31.3 Paragraph 304.2, 304.3; ASME Boiler and Pressure Vessel Code (BPVC), Section VIII, Division 2, Part 4); or

2.5.2 Proof testing in accordance with Section 4; or

2.5.3 Experimental stress analysis (e.g. ASME BPVC, Section VIII, Division 2, Annex 5F) with validation of results. Hydrostatic testing may be used to validate experimental stress analysis; or

2.5.4 Detailed stress analysis (e.g. ASME BPVC, Section VIII, Division 2, Part 5) with validation of results. Strain measurement, photo elastic testing, or hydrostatic testing may be used to validate detailed stress analysis.

Design report and/or calculations must be made available for purchaser's review when utilizing the methods in Sections 2.5.1, 2.5.3, or 2.5.4.

3. DEFINITIONS

***Hydrostatic test*:** A fluid test in which pressure vessels, such as pipelines, can be tested for strength and leaks.

***Lot*:** A lot shall consist of all fittings from the same heat of material of the same starting wall thickness, same method of manufacture and given the same heat treatment in a furnace. Same heat treatment condition means the same process (e.g. normalize, temper) and the same heat-treating cycles (temperatures, time at temperature, cooling method) are used.

***Proof test*:** A pressure test to failure or some predetermined minimum test pressure to demonstrate the reinforcement needed to make the part equal to or greater in strength than the intended mating pipe.

***Same basic design configuration*:** A specific type of fitting whose configuration can be qualified in Section 4.2.1.

***Same method of manufacture*:** The same basic forming and heating methods for forming used in making a specific type of fitting (elbows, tees, reducers, or caps).

***Size*:** Refers to the nominal outside diameter of the mating pipe to which the fitting is attached.

***Traceability*:** The manufacturer shall establish and follow documented procedures for maintaining the heat and lot identity throughout the entire supply chain. Traceability procedures shall provide means for tracing any fitting to the proper heat and lot, and the chemical and mechanical test results.

4. DESIGN PROOF-TEST

4.1 Proof tests shall be made as set forth in this Standard Practice when the manufacturer chooses proof testing to qualify the fitting design. The pressure design thickness, defined as the wall thickness required in critical areas so that the fitting can pass the design proof test, for each type of fitting shall be determined and recorded. The pressure design thickness for other sizes or wall thicknesses covered in Section 4.4 shall require similar percentage or reinforcement proportional by size or thickness. Critical areas are normally the inner radius of elbows, the crotch of tees, the knuckle radius of caps and the large ends of reducers. The proof test shall be based on the computed burst pressure of the fitting and its connecting piping as defined in Section 4.3.

4.2 ***Test Assembly Requirements*:**

4.2.1 Each fitting type shall be tested except the testing of certain types of fittings can qualify other fittings as described below:

Fitting Type Tested[a]	Fitting Type Qualified (Provided same pressure design thickness used)
Short radius elbows[b]	Short radius, long radius, reducing long radius, or 3R elbow
Long radius elbows[b]	Long radius, reducing long radius, or 3R elbow
3R elbows[b]	3R elbow
Straight tee	Straight or reducing tees of any reduction
Reducing tee	Reducing tee with the same or more reduction in outlet size
Caps	Caps of the same configuration
Concentric reducer	Concentric or eccentric reducers with the same or lesser included transition angle[c]
Eccentric reducer	Eccentric or concentric reducers with the same or lesser included transition angle[c]

NOTES:

(a) Section 4.4 applicability of test results apply to all tested and qualified fittings.

(b) A test of any angle elbow will qualify any other angle. A segmented elbow that has a test on a geometrically similar 45° or 90° elbow need not be tested separately.

(c) Transition angle is defined as the angle of the conical section and is calculated as follows:

Concentric Reducer: $\theta = atan\ (D_L - D_S)\ /\ 2L)$

Eccentric Reducer: $\theta = atan\ (D_L - D_S)\ /\ L)$

Where:

θ = Angle of transition;

D_L = Diameter of large end of conical section;

D_S = Diameter of small end of conical section;

L = Length of conical section.

Fittings that have the same basic design configuration[1] and method of manufacture[2] shall be selected from production for testing and shall be identified as to material, grade and lot, including heat treatment. They shall be inspected for dimensional compliance to this Standard Practice.

NOTES:

(1) Examples NOT considered the same basic design configurations are: Elbows with different radii, tees versus extruded outlet headers, bell shaped (i.e. with tangents) versus conical reducers, and caps of different shapes.

(2) Examples NOT considered the same method of manufacture are: Full formed tees versus extruded headers, cold formed versus hot formed or differential heating, and rolled and welded versus die formed reducers. Elbows of the same curvature radius, whether seamless, welded with a joint efficiency factor of 1.00, or bent from pipe, will have the same pressure design thickness and may be combined or mixed to achieve the testing factor *f* of 1.00.

4.2.2 Straight seamless or welded pipe whose calculated bursting strength is at least as great as the proof test pressure as calculated in Section 4.3, shall be welded to each end of the fitting to be tested. Pipe sections may have the nominal wall greater than the thickness indicated by the fitting markings. That greater thickness shall not exceed 1.5 times the nominal pipe wall thickness of the pipe that the fitting marking identifies. Any internal misalignment greater than 0.06 in. shall be reduced by taper boring at a slope not exceeding 1:3 (18°). Any other unequal wall welding preparation shall be in accordance with Figure 3. The minimum length of pipe sections for closures shall be one-half pipe O.D. for greater than NPS 14 and one pipe O.D. for NPS 14 and smaller.

4.3 The test fluid shall be water or other liquid. Hydrostatic pressure shall be applied to the assembly. At least three (3) proof tests for each fitting, joint size, or configuration are recommended.

The testing factor *f*, based on the number of specimen tests performed in the chart below, shall be used in the computed test equations:

Number of Tests	Testing Factor f
1	1.10
2	1.05
3	1.00

NOTE: Tests of geometrically identical fittings of different sizes and wall thicknesses that have overlapping ranges as described in Section 4.4 may be combined to establish the test factor applied to a set of fittings. Example – testing of a NPS 16, NPS 24 and NPS 30 of the same basic design configuration and method of manufacture would qualify for a test factor of 1.0 and fittings of that type from NPS 8 to NPS 60.

The test shall be taken to rupture or held at or above the computed minimum proof pressure for a period of at least three (3) minutes. The test is successful if for each of the tests, the fitting withstands without rupture a proof test pressure at least equal to the computed minimum:

$$P = 2\,f\,St/D$$

Where:

P = computed minimum proof test pressure for fitting;

f = testing factor from table listed in Section 4.3;

S = actual tensile strength of the test fitting, determined on a specimen representative of the test fitting, which shall meet the tensile strength requirements of the applicable material of Section 6;

t = nominal pipe wall thickness of the pipe that the fitting marking identifies;

D = specified outside diameter of pipe.

4.4 It is not necessary to conduct an individual test of fittings with all combinations of sizes, wall thicknesses, and materials. A successful proof test on one representative fitting may represent others to the extent described in Sections 4.4.1, 4.4.2, and 4.4.3.

4.4.1 One test fitting may be used to qualify fittings of the same basic design configuration and method of manufacture with a size range from one-half to twice that for the tested fitting.

4.4.2 One test fitting may be used to qualify fittings of the same basic design configuration and method of manufacture with t/D ranges from one-half to three times that for the tested fitting.

4.4.3 The pressure retaining capacity of a fitting of the same basic design configuration and method of manufacture made of various grades of steel as listed in Section 6 will be directly proportional to the tensile properties of the materials, provided the yield-to-tensile ratio is 0.90 or less. Therefore, it is necessary to test only a single material in a representative fitting to prove the design of the fitting.

4.5 The manufacturer shall have a quality control (QC) program that verifies the manufacturing process used and ensures that the resulting geometry and pressure design thickness of the fittings or joints manufactured conforms to the geometries tested. The QC program shall control the manufacturing drawings and maintain the QC records showing conformance to these drawings.

Tests made in accordance with and at the time of previous editions of this test are not intended to be nullified by the changes made in this edition's test procedure and requirement provided the design criteria for the type tested can be determined.

Whenever a significant change is made in the geometry or method of manufacture, the manufacturer shall either retest the new production or show by analysis that the change would not affect the results of prior tests. Examples of changes in geometry that require retests are a change in thickness or revised tooling configuration.

4.6 A report of the testing for each test assembly shall be prepared and shall include:

a) Description of the test, including the number of tests and f factor used to establish the target proof test;
b) Instrumentation and methods of calibrations used;
c) Material test reports for the assembly's materials;
d) Actual final pressures achieved for each test;
e) Length of time from test initiation to the time of burst, or the hold time at or above the computed target pressure;
f) Calculations performed;
g) Location of rupture, if any, including a sketch or photograph(s) of the assembly;
h) Actual measured thickness in critical areas.

The pressure design thickness required in critical areas shall be reported either on the reports for the individual tests or on a separate report covering multiple tests. If more than one test is used to establish the test factor *f*, all of these tests shall be considered for the determination of the pressure design thickness.

The test report shall be made available at the manufacturer's facility for inspection by the purchaser or regulatory authority.

5. HYDROSTATIC TESTING

5.1 Unless otherwise agreed upon as per Section 2.3, welding fittings shall be capable of withstanding a hydrostatic test pressure as specified in Section 2.2; however, hydrostatic testing by the manufacturer is not required.

6. MATERIALS

6.1 The steel shall be killed and made to a fine grain practice using recognized melting practices.

6.2 The material for fittings shall consist of forgings, plate, seamless or fusion-welded tubular products with filler metal added.

6.3 Steel shall be suitable for field welding to other fittings, flanges, and pipe manufactured to applicable specifications listed in the ASME B31 Codes.

6.4 If preheating of the material is required to ensure proper weldability under normal field conditions, the manufacturer shall state specific preheat requirements and permanently indicate this on the fitting.

6.5 Since thermomechanical controlled process (TMCP) plate results in material that loses properties when heated over 500 °F, this type of plate is not typically used for fitting manufacture. If the purchaser wishes to use this material, they must consult with the manufacturer and determine what forming conditions and heat treatments are acceptable for this material's use.

7. CHEMICAL COMPOSITION

7.1 The determination of the chemical composition of each heat of steel used in meeting the requirements of Table 1 shall be determined by a product analysis, unless otherwise noted in the Table, and controlled[(1)] by the fitting manufacturer. The heat (ladle) and product analysis shall be reported. The chemical method of analysis shall be done in accordance with a recognized standard (e.g. ASTM A751).

7.2 The choice and use of alloying elements for fittings shall be made by the manufacturer.

7.3 The Carbon Equivalent *(CE)* shall be computed by one of the following equations below (based upon the product analysis):

For: $C > 0.17\%$

1)

$$CE = C + \frac{Mn}{6} + \frac{Cr + Mo + V}{5} + \frac{Ni + Cu}{15}$$

For: $C \leq 0.17\%$

2)

$$CE = C + F\left(\frac{Mn}{6} + \frac{Si}{24} + \frac{Cu}{15} + \frac{Ni}{20} + \frac{Cr + Mo + V + Nb}{5} + 5B\right)$$

Where:

F = a compliance factor dependent upon carbon content defined as follows:

Carbon Content, %	*F*
<0.06	0.53
0.06	0.54
0.07	0.56
0.08	0.58
0.09	0.62
0.10	0.66
0.11	0.70

Carbon Content, %	*F*
0.12	0.75
0.13	0.80
0.14	0.85
0.15	0.88
0.16	0.92
0.17	0.94

The maximum *CE* by either equation above shall not exceed 0.45%. If the actual *CE* is greater than 0.42 %, the parts shall be stamped or paint marked with the actual *CE*.

NOTE: (1) Product analysis from the starting mill material is acceptable, provided the manufacturer has assured, by normal methods of Quality Assurance, that the results are representative of the delivered product. Normal methods of Quality Assurance may include: periodic Supplier Quality audits, periodic over-check testing of incoming material, records of Supplier non-conformances and effective Supplier corrective actions and records that demonstrate a Supplier's consistent conformance to chemical and mechanical properties.

8. TENSILE PROPERTIES

8.1 Tensile properties shall meet the requirements as specified in Table 2.

8.1.1 Upon agreement by the purchaser, a fitting may have thickness or yield strength or both unequal to the pipe with which it is intended to be used, provided the welding- end preparation at the joint assures wall thickness of the fitting is at least equal to the specified pipe-wall thickness times the ratio of the specified minimum yield strength of the pipe and the minimum-tested yield strength of the fitting. See Figures 3(a), 3(b), and 3(c) for joint preparation.

8.2 Test specimens should be taken from the fitting or from an integral prolongation of the fitting after final heat treatment (see Section 8.4). A separate test piece may be attached to the end of a fitting, such that it will be heat treated in a lot with the fitting(s) it represents. Test piece of pipe or plate shall be placed within the surveyed working zone of the furnace during heat treatment and consideration should be given that the thermal cycle of fitting and sample are similar, e.g. stacking conditions of the sample and fitting have to be the same. Limitations on use of separate test pieces are covered in SR-23.

If the fittings will be exposed to an assembly Post-Weld Heat Treatment (PWHT) or a field PWHT and the PWHT temperature is higher than the final tempering temperature for the fitting, additional tensile testing shall be requested by the purchaser to ensure the fitting meets the requirements of Section 8 after the PWHT thermal cycle.

8.3 Test specimens shall be in accordance with ASTM A370 using full-size specimens or largest sub-size specimens obtainable. Yield strength shall be determined either by the 0.2% offset or the 0.5% extension under load (EUL) method. Test specimen orientation shall be taken transverse to the major axis of the fitting for NPS 8 or larger material and shall be longitudinal to the major axis for smaller sizes. Test specimen axial location shall be 1/2 t for thicknesses less than or equal to 1½ in., and 1/4 t for thicknesses greater than 1½ in.

8.4 One base metal tension test to determine yield strength, tensile strength, and percent (%) elongation shall be made from each lot of fittings.

Lot testing results may apply for a period of one year or until any major furnace modifications occur as defined by ASTM A991/A991M, whichever is sooner.

8.5 Fittings containing welds shall have one tension test specimen taken from across the weld with the axis transverse to the weld seam for each lot of fittings. Only the ultimate tensile strength need meet the minimum requirements of Table 2.

8.6 If the tension test specimen from any lot fails to conform to the requirements for the particular grade ordered, the manufacturer may elect to make retests on two additional pieces from the same lot, each of which shall conform to the requirements specified in Table 2.

If one or both of the retests fail to conform to the requirements, the manufacturer may elect to test each of the remaining pieces in the lot. Retests are required only for the particular test with which the specimen did not comply originally.

8.7 Cold flattening of transverse test specimens is permitted if other test specimens cannot be obtained reasonably. When a separate test piece is used, consider flattening of samples for the tests prior to heat treatment. Consideration should be given to the amount of cold-working and the effects that cold-working may have on the testing results.

9. HEAT TREATMENT

9.1 All fittings shall be furnished in a heat-treated condition done by a trained operator. Hot formed fittings shall be cooled below the lower critical temperature prior to heat treatment. The adequacy of the furnace working zone to achieve and maintain temperature uniformity of ±25 °F shall be established by annual survey in accordance with a recognized standard (e.g. ASTM A991/A991M, AMS 2750) and records shall be retained. Thermocouples and other temperature measuring recording devices shall be calibrated quarterly. If necessary, due to the furnace's inability to meet the required uniformity survey or calibration requirements, other practices may be considered (e.g. thermocouples, reduced working zone) provided it can be demonstrated that said practice achieves consistent heat treat results through testing. This alternate practice shall be documented, used for a maximum of three (3) months, and each heat treat load shall require mechanical testing regardless of whether the loads are of the same lot.

Fittings shall be heat treated by one or more of the following procedures:

9.1.1 ***Stress Relieving*** Stress relieving shall be limited only to guide bar welds unless otherwise agreed upon between the manufacturer and the purchaser. Fittings shall be heated to a suitable temperature below the transformation range, but not less than 1000 ºF, holding at temperature for not less than one hour per inch of maximum thickness, but never less than one-half hour and cooling in the furnace or in air.

9.1.2 ***Normalizing*** Fittings shall be uniformly reheated above the transformation range (austenite range), held at this temperature a sufficient time to achieve uniform temperature throughout the mass and cooled in air.

9.1.3 ***Normalizing & Tempering*** Fittings shall be normalized in accordance with Section 9.1.2. They shall then be tempered by reheating to a temperature below the transformation range, but not less than 1000 ºF, held at temperature for a minimum of one hour per inch of maximum thickness, but not less than one-half hour and cooled in the furnace or in air.

9.1.4 ***Quenching & Tempering*** Fittings shall be uniformly reheated above the transformation range, held at temperature sufficient to achieve uniform temperature throughout the mass and immediately immersion quenched in a suitable liquid medium. They shall then be reheated and tempered per Section 9.1.3. Quenching facilities shall be of sufficient size and equipped to assure proper and uniform cooling.

9.2 ***Heat Treat Procedures*** Heat treat procedures shall be available for review at the facility and shall include requirements for furnace temperatures and soak times at temperature. For quench treatments, cooling medium temperature before and after quench shall be controlled along with time to the quench tank. Cooling medium temperature and agitation should be considered to ensure proper cooling rate based on maximum mass being heat treated. Furnaces shall be visually inspected regularly for scale build-up, burner malfunction, loss of refractory material, or hot spots on the shell of the furnace.

9.3 ***Heat Treat Records*** A record of each heat treat load shall be recorded and reviewed for consistency to previous loads of the same lot. Records shall, at a minimum, include furnace number, date, heat codes of all pieces in the load, procedure used, order number and part descriptions. Manufacturers using third party services shall maintain copies of all heat treat records from their sub-supplier.

10. TRANSVERSE GUIDED-WELD BEND-TESTS (MOVED TO SR-2)

For this edition, Section 10 was moved into a supplementary requirement (SR-2); however, the numbering has been maintained, along with all the following sections and the SRs.

11. NOTCH-TOUGHNESS PROPERTIES

11.1 Notch-toughness properties shall be determined with full size Charpy V notch specimens in accordance with ASTM A370 for base metal and weld. Sub-size specimens shall be used only when material to be tested is of insufficient thickness.

11.2 Impact specimens shall be taken at the same frequency, location and orientation as the tensile tests (see Sections 8.3 and 8.7). Specimen notch orientation should be C - L for NPS 8 and larger and L - C for smaller sizes (see illustration below).

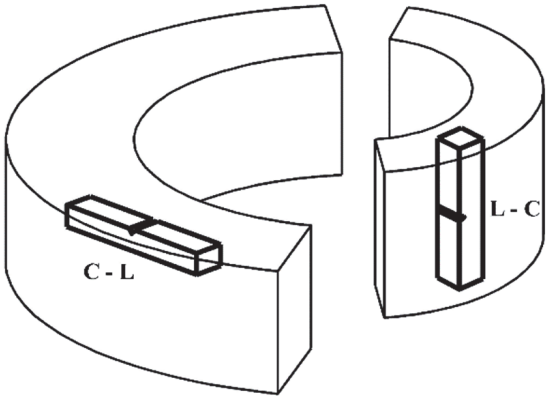

Specimen Notch Orientation

One set (three specimens) of base metal and weld metal shall be tested at +20 °F or lower and show 20 ft-lb minimum average with no one specimen less than 15 ft-lb. Percent shear shall be reported on base metal only for informational purposes.

11.3 Notch-toughness testing of NPS 14 and smaller is not required unless Grades WPHY 65 or higher are supplied or the purchaser specifies testing; however, NPS 4 and smaller, as well as, wall thickness thinner than 0.236 in., do not require notch-toughness testing.

11.4 If the acceptance requirements of Section 11.2 are not met, one retest of three additional specimens from the same test location and orientation may be performed. Each individual test value of the retested specimens shall be equal to or greater than the specified minimum average value.

12. FITTING DIMENSIONS

12.1 One of the principles of this Standard Practice is the maintenance of a fixed position for the welding ends with reference to the center line of the fittings or the overall dimensions, as the case may be. Dimensional standards for fittings NPS 16 and larger are shown in Tables 3 through 9. Dimensional standards and tolerances (including minimum wall thickness of 87½%) for NPS 14 and smaller sizes are contained in ASME B16.9.

13. TOLERANCES FOR WELDING FITTINGS

13.1 ***Tolerances*** The tolerances for fittings NPS 16 and larger are shown in Table 3 and are applicable to the nominal dimensions given in Tables 4 through 9 inclusive.

13.2 ***Wall Thickness*** The minimum wall thickness may be 0.01 in. under the nominal thickness, except that isolated non-continuous reductions are permitted provided the remaining wall thickness is not diminished to less than 93.5% of the specified nominal. These tolerances do not apply to areas where reinforcement is required per Section 2.5. In no case can the total area of isolated non-continuous reductions exceed 10% of the outside surface area of the fitting.

13.3 ***Welding Ends*** Unless otherwise specified, the details of the welding end preparation shall be in accordance with Figures 1 or 2. The root face of the fitting shall be machined flat and shall not vary from the plane by more than 0.03 in. at any point. Where the wall of the fitting exceeds that of matching pipe, the transition shall be in accordance with the details given in Figure 3.

13.4 ***Angularity and Off Plane*** The ends of fittings shall be cut in accordance with the tolerances listed in Table 3.

13.5 ***Segmentable Elbows*** When elbows are intended for segmenting in the field, they shall be furnished with a 1% maximum out-of-round (OOR) based on the nominal mating pipe outside diameter throughout the length of the elbow. The inside diameter in all measured locations shall be no larger than the mating pipe nominal inside diameter to the high tolerance given in Table 3 based on circumferential readings. The outside or inside diameter and out-of-round shall be measured at both ends, the middle and at least every 22½ degrees of remaining elbow. Both ends of the elbow shall be stamped or paint marked "SEGM" to signify elbows are intended to be segmented. The requirements stated above are requisite on shop manufactured elbows before segmenting. To minimize the difficulties of elbow segmenting in the field, recommendations in Appendix X3 should be considered.

13.6 ***Minimum Bore*** Minimum bore throughout any fittings shall be at least 93% of nominal pipe inside diameter, unless otherwise agreed between purchaser and manufacturer.

14. MANUFACTURE

14.1 Fittings shall be manufactured in accordance with a documented Manufacturing Procedure Specification (MPS). If specified by the purchaser, manufacturing shall not proceed until the MPS has been accepted by the purchaser.

The MPS shall specify the following items, as applicable:

a) For the starting material:
   1) Product form (seamless or welded) and dimensions,
   2) Welding NDE results, if not completed by the fitting manufacturer;
b) For fitting manufacture:
   1) Forming method,
   2) Welding procedure specification and approval record, if applicable,
   3) Heat treatment procedure including thermal cycles,
   4) Machining requirements,
   5) Inspection, dimensions and test requirements,
   6) Proof test results if requested,
   7) Traceability;
c) Additional requirements such as end preparation, coating, and marking.

14.2 Fittings may be made by forging, hammering, pressing, piercing, rolling, extruding, upsetting, expanding, welding, or by a combination of these operations. The forming procedure shall be so applied that it will not produce injurious defects in the fittings.

14.2.1 Fabricated tees, elbows, and other fittings employing circumferential or intersection welds, (e.g. miter welds), are considered pipe fabrications, and are not within the scope of this Standard Practice.

14.3 All outlets NPS 2 and larger shall be of integral contour type and ends of outlets shall match the joining pipe or fitting specified.

14.4 ***Welding Fabrication***

14.4.1 Seam-welded pipe that is made in accordance with an ASTM or API Specification shall comply with the welding requirements of the applicable material specification. All other welds, including those used in the manufacture of other pipe or cylinders, shall be made by welders, welding operators, and welding procedures qualified in accordance with the provisions of Section IX of the ASME BPVC.

Qualified Welding Procedure Specifications (WPS), including those intended for repairs, and their associated Procedure Qualification Records (PQR) shall be available for review by the purchaser, if requested.

14.4.2 The joints shall be furnished in accordance with the requirements of Paragraph UW-35 (a) of Section VIII, Division 1 of the ASME BPVC.

14.4.3 Welding shall be done by an electric process, preferably by submerged arc.

14.4.4 All butt welds shall have full penetration and be done with at least one pass from the inside. Backing rings shall not be used.

14.4.5 Grinding of weld surfaces or edges shall be done in such a manner as to not reduce the wall thickness to less than that permitted in Section 13.2.

14.4.6 Fillet welds shall have a full throat and, unless otherwise specified, the legs shall be of approximately equal length.

14.4.7 Welded-on braces, if used, should be removed before heat treatment and the weld spot shall be repaired and ground flush and smooth. However, when braces are required for heat treatment, they shall be cut out and the surface shall be ground flush and smooth after heat treatment. No welding shall be permitted after heat treatment.

14.4.8 Weld metal used in the construction of fittings shall be suitable to meet the tensile-strength and notch toughness requirements of Sections 8 and 11 when heat treated in accordance with Section 9.

14.5 *Workmanship and Finish*

14.5.1 Fittings shall be free of injurious defects and shall have workmanlike finish. The surface finish shall allow the detection of imperfections that can be disclosed by visual inspection.

14.5.2 Injurious defects are defined as those encroaching upon the minimum wall thickness as defined in Section 13.2. Injurious defects shall not be repaired without purchaser approval.

When approved by the purchaser, weld repair of injurious defects shall be done by a qualified welding procedure and an operator qualified in accordance with Section IX of the ASME BPVC. Defects shall be completely removed with verification by magnetic particle (MP/MT) or liquid penetrant (LP/LT) examination. After repair, the surface shall be ground smooth to the original contour, volumetric NDE inspected (see Section 15), and heat treated in accordance with Section 9.

14.5.3 Sharp defects such as notches, scratches, scabs, seams, laps, tears, or slivers that result in a wall thickness not less than permitted by Section 13.2 shall be removed by grinding, machining, or repaired by welding. When repaired by welding, the defects must be completely removed and welding performed by a welder qualified specifically for repair welding, as per Section 14.4.1. Such repair welding shall be ground flush with the surface and all welding shall be done before final heat treatment. Stress relieving may be used as the final heat treatment after repair welding provided the fitting has previously undergone a heat treatment in accordance with Section 9 and the base material and welds meet the mechanical properties of Sections 8 and 11 after the entire thermal cycle. Repair welding shall be done with a low hydrogen process.

15. NONDESTRUCTIVE EXAMINATION (NDE)

15.1 ***Radiographic Examination (RT)*** Unless otherwise agreed between purchaser and manufacturer (see Appendix X1 SR-15), all butt welds shall be radiographically examined (RT) in accordance with ASME BPVC, Section V, Article 2, using fine grain film and lead screens. Longitudinal weld seams shall meet the acceptance standards in ASME BPVC, Section VIII, Division 1.

15.2 ***Magnetic Particle (MP/MT) or Ultrasonic (UT) Examination*** Magnetic particle (MP/MT) or ultrasonic (UT) examination shall be used for the examination of all fillet welds and all other welds where it is impossible or impractical to use RT examination. Methods and acceptance standards shall be by agreement between the manufacturer and purchaser.

15.3 ***Magnetic Particle (MP/MT) or Liquid Penetrant (LP/PT) Examination*** All butt-weld tees manufactured by cold-forming method(s) shall be subjected to magnetic particle (MP/MT) or liquid/dye penetrant (LP/PT) examination. This examination shall be performed after final heat treatment. Only the side wall area of the tees need be examined. This area is defined by a circle that covers the area from the weld bevel of the branch outlet to the center line of the body or run. Internal and external surfaces shall be examined, when size permits accessibility. No cracks shall be permitted. Other imperfections shall be treated in accordance with Section 14.5. Acceptable tees shall be marked with the symbol "MT" to designate magnetic particle examination, or with "PT" to designate liquid/dye penetrant examination, as applicable, to indicate compliance. Nondestructive examination personnel and procedures shall be qualified in accordance with ASME BPVC, Section V.

16. QUALITY CONTROL

16.1 The manufacturer shall have a quality control (QC) program that ensures the fitting conforms to all the requirements of this standard, unless otherwise permitted in Section 1.4. This program shall control the manufacturing process, heat treat process, testing, inspection, material traceability from starting material to final product, and documentation necessary to be in full compliance with this standard. The control and verification of sub-supplier activities (e.g. steelmaking, forming, heat treatment, inspection, etc.) shall be the responsibility of the manufacturer.

16.2 ***Inspector*** At all times while work on the contract of the purchaser is being performed, the inspector representing the purchaser shall have free entry to all parts of the manufacturer's facilities that involve the manufacture of the ordered fittings. All reasonable access to facilities shall be afforded to satisfy the inspector that the product is being furnished in accordance with these specifications. All tests and inspections called for by these specifications will be made in the manufacturer's plant prior to shipment and at the manufacturer's expense unless otherwise specified and shall be so conducted as not to interfere unnecessarily with the operations of the manufacturer's plant.

16.3 ***Inspection Test Plan (ITP)*** The inspection and testing to be performed during qualification and production shall be as summarized in Section 16.3.1. When requested, hold points by the purchaser should be identified on a submitted ITP plan.

16.3.1 ***Inspection Test Plan Requirements*** See the chart below:

INSPECTION TEST PLAN REQUIREMENTS		
Type of Test Mandatory Requirements:	**Section, Appendix XI SR**	**Number of Tests**
Chemical Analysis – base metal	7.1	1 per heat
Tensile – base metal	8.4	1 per lot
Tensile – weld	8.5	1 per lot
Impact Testing – base metal & weld	11.2	2 sets of 3
Visual Inspection	14.5	Each fitting
RT/UT – weld seam	15.1, SR-15	100% of all welds
MP(MT) / LP(PT) – cold formed tees	15.3	Each tee
Dimensional Checks	12 & Tables 3 to 9	Per MPS
Type of Test If specified by purchaser:	**Section, Appendix XI SR**	**Number of Tests**
Chemical Analysis – weld metal combination	SR-13	Each filler metal/flux
Impacts – weld seam HAZ	SR-17	By agreement
Hardness Test – base/weld metal	SR-22	1 per lot or each fitting
Underbead Crack Test	SR-1	Per heat
Guided-Bend Test – weld	SR-2	2 per lot
MP(MT) / UT – welds	15.2	Only if RT not practical
MP(MT) / LP(PT) End Bevels	SR-14	Each end or by agreement
UT Fitting Body	SR-8	Each fitting or by agreement
Sour Gas Applications	SR-4	Per Customer PO
No Repair Weld	SR-11	By agreement
No Wall Substitution	8.1.1	By agreement
API 5L PSL2 Complementary Requirements	SR-24	By agreement

16.4 ***Certified Material Test Report (CMTR)*** A Certified Material Test Report shall be furnished stating that the fitting is in full compliance with this specification, unless otherwise permitted (see Section 1.4), and includes the following:

a) The actual results of the chemical heat (ladle) and product analysis, including carbon equivalent, see Section 7;

b) The mechanical properties of each lot of fittings and tensile strength of weld (if applicable), including specimen size and orientation, see Section 8;

c) Notch-toughness properties of all specimens, including specimen size, orientation, and test temperature, see Section 11;

d) Heat treatment used, including temperatures and tempering hold times, see Section 9;

e) Nondestructive examination results as applicable, see Section 15;

f) Any special or supplemental tests required by the purchase order;

g) The CMTR shall include a part description that matches the marking on the part;

h) Any applicable customer specification may be listed on the CMTR;

i) Unless otherwise specified, the latest edition of MSS SP-75 shall apply and be indicated on the CMTR;

j) Name and location of starting material manufacturer with heat number;

k) Name and location of all entities used to perform any forming operation, welding, and heat treatment for the fitting.

16.5 ***Records Retention*** Records for the items listed in Section 16.4, and as required per Section 16.1, shall be retained by the Manufacturer for a minimum period of three years from the date of the purchase order and be made available to the Purchaser upon request.

17. MARKING

17.1 All fittings furnished under this Standard Practice shall be clearly defined on the outside diameter with the following information marked using low-stress die stamps or interrupted-dot stamps, except as noted:

a) Manufacturer's name or trademark

b) Nominal wall thickness of fittings at bevel ends

In the case of unequal thickness, as in Section 8.1.1, the actual wall thickness of the fitting at the bevel ends shall be identified.

c) Respective grade as given in Table 2

In the case of unequal yield strength, as in Section 8.1.1, both the minimum-tested yield strength of the fitting and the specified minimum yield strength of the pipe shall be identified, for example;

WPHY60/*X*70

The designation "WPHY" represents marking for fittings, "X" variable represents marking for mating pipe grade.

d) Heat code identity

e) Size(1)

f) "SEGM"(1) when appropriate, see Section 13.5

g) "CE"(1) if greater than 0.42%

h) "PART" for partial compliance fitting if applicable, see Section 1.4.1

i) Preheat conditions if applicable, see Section 6.4

j) "PT" or "MT" as applicable, see Section 15.3

k) "SOUR"(1) if applicable

l) For fittings ordered as PSL2, marking shall include "PSL2" after the grade (see SR-24)

Any deviation from these mandatory requirements will need agreement between manufacturer and purchaser.

17.2 In addition to the above, extruded headers shall also include the following information:

a) Design pressure

b) Temperature

c) Per applicable ASME B31 Code

SUPPLEMENTARY INFORMATION: Appendices X1 (*Supplementary Requirements*), X2 (*Longitudinal-Bead Underbead Cracking Test*), and X3 (*Recommendations for Segmenting*) are "supplemental information" and located after the normative text (including Tables and Annex A), starting on page 34.

NOTE: (1) At the option of the manufacturer, this information may be paint stenciled in lieu of die stamping.

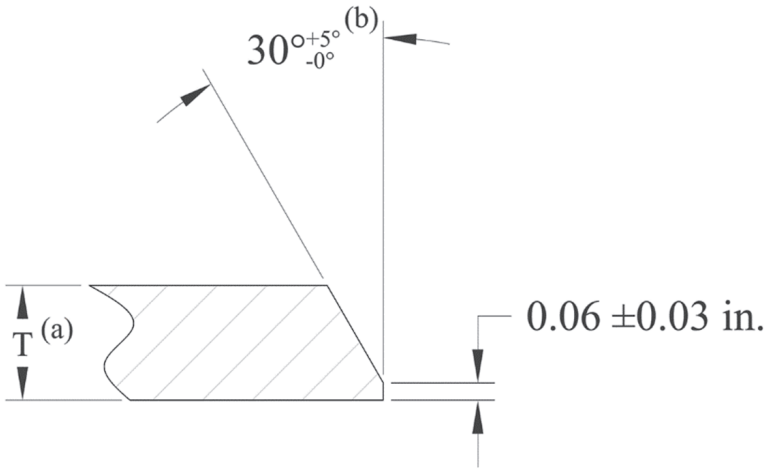

FIGURE 1
Recommended Bevel for Wall Thicknesses (T) at End of Fitting, 0.75 in.[a] or less

NOTES:
(a) Or 1 in. at the option of the manufacturer.
(b) Fittings NPS 24 and smaller may be furnished with 37½° ± 2½° bevel, at the option of the manufacturer.

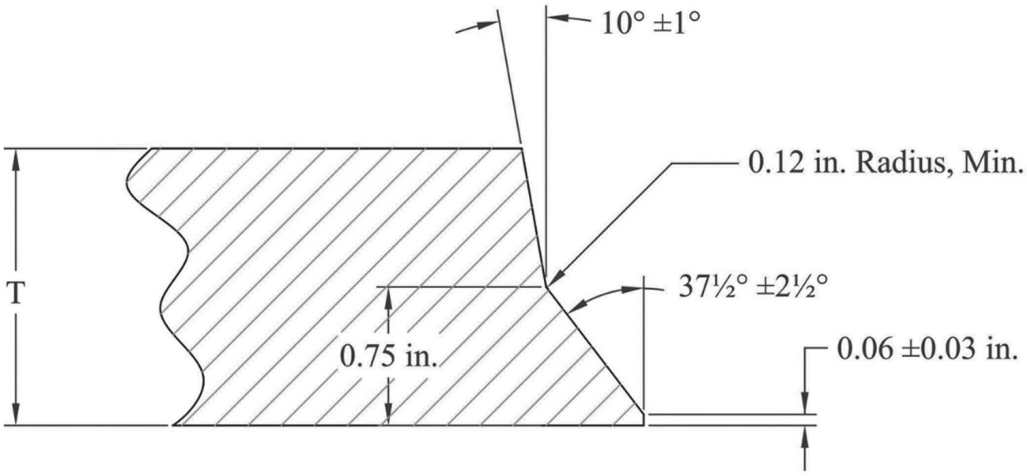

FIGURE 2
Recommended Bevel for Wall Thicknesses (T) at End of Fitting, Greater than 0.75 in.

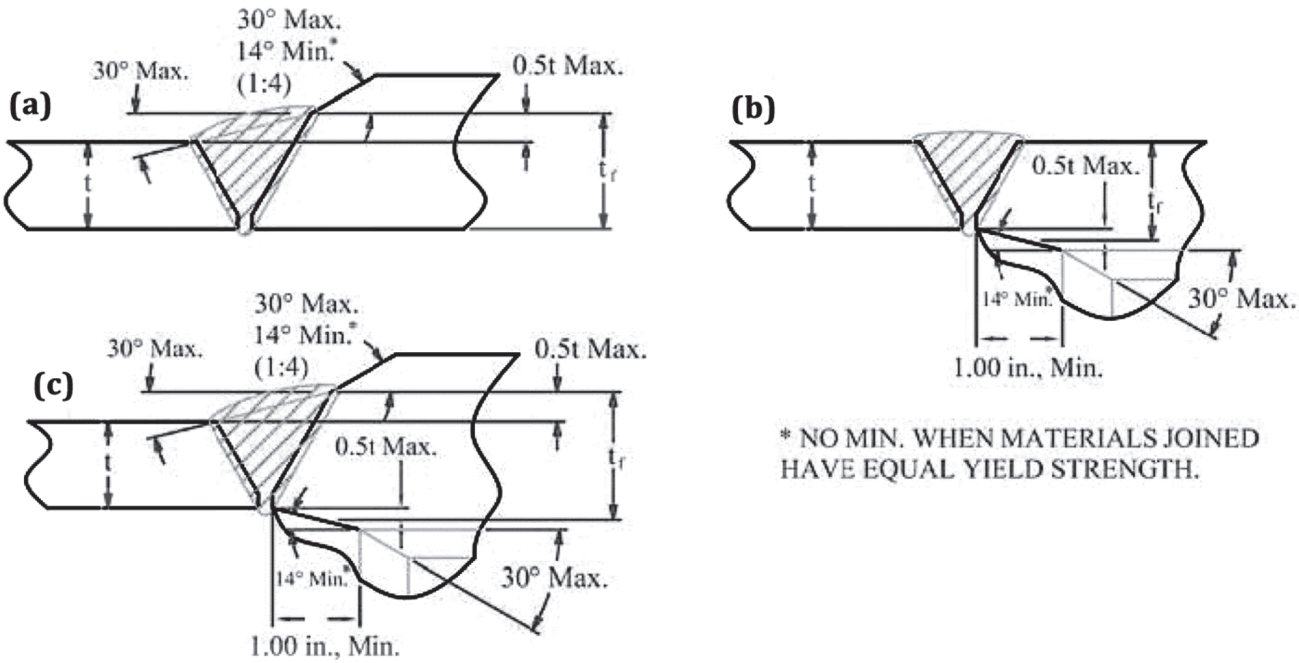

GENERAL NOTE: When the minimum-specified yield strengths of the sections to be joined are unequal, the deposited weld metal shall have mechanical properties at least equal to those of the section having the higher strength, and then the nominal fitting thickness t_f shall at least equal the nominal pipe wall thickness t times the ratio of minimum-specified yield strength of pipe and fitting. See Section 8.1.1.

FIGURES 3(a), 3(b), and 3(c)

Acceptable Design for Unequal Wall Thickness (See Section 8.1.1)

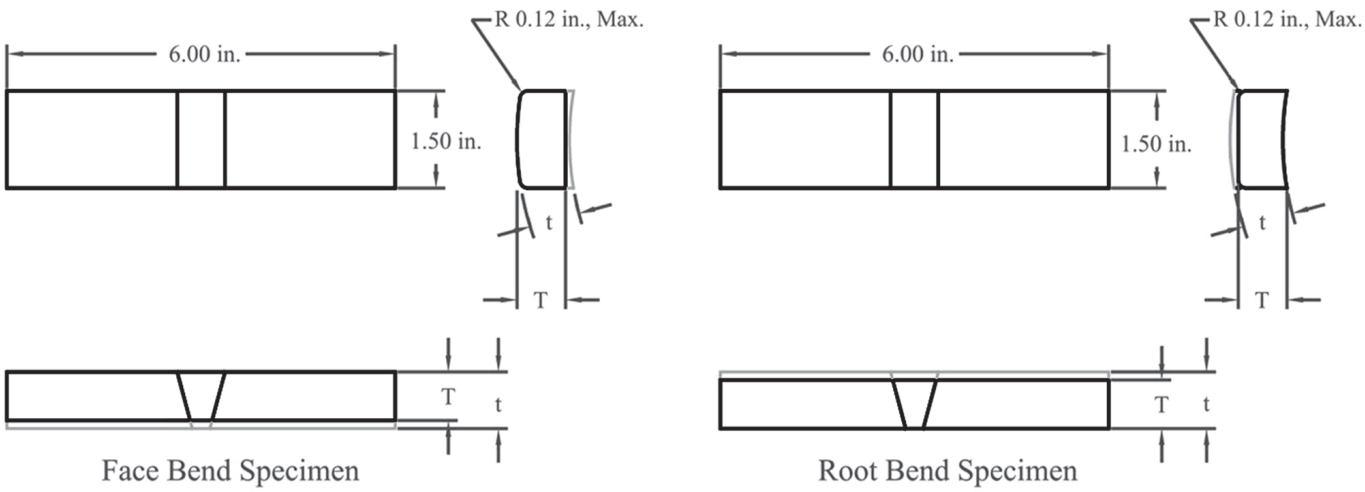

Pipe Wall Thickness (t)	Test Specimen Thickness (T) (in.)
Up to 0.375 in. incl.	t
Over 0.375 in.	0.375 in.

FIGURE 4

Transverse Face and Root-Bend Test Specimens

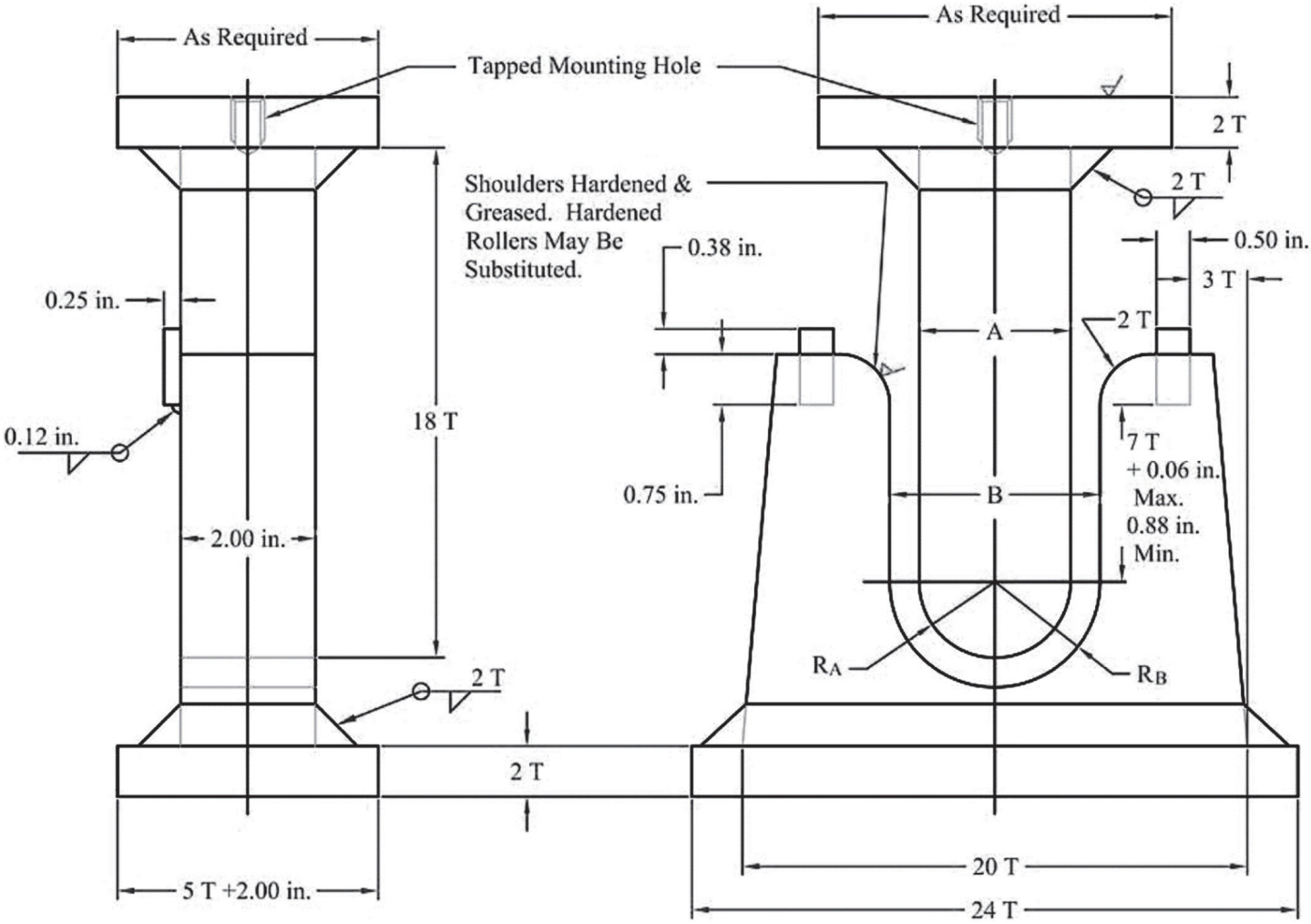

Guided-Bend Test Jig Dimensions

	WPHY Grade of Steel			
	42	46	52, 56	60, 65, 70, 80
Radius of male member, R_A	3T	3½T	4T	4½T
Radius of female member, R_B	4T + 0.06 in.	4½T + 0.06 in.	5T + 0.06 in.	5½T + 0.06 in.
Width of male member, A	6T	7T	8T	9T
Width of groove in female member, B . .	8T + 0.12 in.	9T + 0.12 in.	10T + 0.12 in.	11T + 0.12 in.

T = Specimen Wall Thickness

FIGURE 5
Guided-Bend Test Jig

TABLE 1
Maximum Limit of Chemical Elements

Element	(% Max or Range)
Carbon (C)	0.25
Manganese (Mn)	1.60
Phosphorus (P)	0.025
Sulphur (S)	0.015
Copper (Cu)	0.45
Nickel (Ni)	0.50
Silicon (Si)	0.15 – 0.45
Chromium (Cr)	0.25
Molybdenum (Mo)	0.25
Vanadium (V)	0.11
Niobium (Columbium) (Nb)	0.10
Titanium (Ti)	0.04
Boron (B) – Product Analysis	0.001
Boron (B) – Heat (ladle) Analysis	0.0005
Aluminum (Al) [(a)]	0.02 – 0.06

GENERAL NOTE: Elements not mentioned in this table shall not be added intentionally without the purchaser's approval except for elements that may be added for deoxidation and finishing of the heat. This table is not intended to represent the composition of any heat of steel, but merely to record the maximum permissible amounts of an element. The combination of elements of any heat must conform to carbon equivalent, Section 7.3. The product analysis results shall not exceed the limits in Table 1 for the specified element.

NOTE: (a) Range only applies to aluminum killed steel.

TABLE 2
Tensile Requirements

Grade (WPHY)	Yield Strength Min. psi	Tensile Strength, Min. psi	Minimum Elongation (%, in 2 in.)
		All Thicknesses	
42	42 000	60 000	25
46	46 000	63 000	25
52	52 000	66 000	25
56	56 000	71 000	20
60	60 000	75 000	20
65	65 000	77 000	20
70	70 000	82 000	18
80	80 000	90 000	16

GENERAL NOTE: The tensile requirements for intermediate grades shall be obtained by linear interpolation between those specified for standard grades. The minimum elongation value shall be as given in the Table for next higher standard grade.

TABLE 3
Tolerances

Dimensions are in inches

NPS	Inside[a] Diameter at End	Minimum[c] Wall Thickness	Out-of-Roundness[b]			Elbows & Tees Center-to-End Dimension A, B, C, M		Reducers Overall Length	Caps Overall Length	Angularity Off Angle	Elbows Off Plane	Eccentric and Concentric Reducers Off Plane
			At Ends of Fittings		Throughout[d] Body of Elbows							
			Elbows[e]	Other		$1^1/_2$ R & Tee	3R	H	E	Q	P	P[f]
16 – 24	± 0.09	Nominal (-0.01)	0.19	0.12	2.5%	± 0.09	± 0.12	± 0.09	± 0.25	0.09	0.25	2.5%
26 – 36	± 0.09		(e)	0.12	2.5%	± 0.12	± 0.25	± 0.19	± 0.38	0.09	0.50	2.5%
38 – 48	± 0.12		(e)	0.12	2.5%	± 0.19	± 0.38	± 0.38	± 0.38	0.12	0.75	2.5%
50 – 60	± 0.25		(e)	0.19	2.5%	± 0.25	± 0.38	± 0.38	± 0.38	0.19	0.75	2.5%

GENERAL NOTE: The O.D. may be tapered at an angle up to 30º beyond weld bevel.

NOTES:

(a) The inside diameter at end shall be determined by circumferential measurements, and the tolerance refers to variations from nominal I.D. calculation by *(O.D. nom.-2tnom.)*.

(b) Out-of-roundness tolerances shall be the difference between the maximum and minimum diameters measured on any radial cross-section.

(c) Minus 0.01 in. except that isolated non-continuous reductions are permitted in accordance with Section 13.2. Excess thickness whether on inside or outside is to be treated in accordance with sketches given in Figure 3.

(d) When elbows are intended for segmenting, see Section 13.5

(e) Out-of-roundness tolerances at ends shall be 1% of mating pipe outside diameter for NPS 26 and larger.

(f) Percent (%) of nominal O.D.

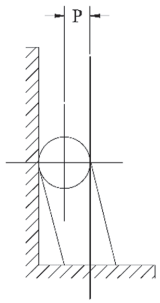

Off Plane P

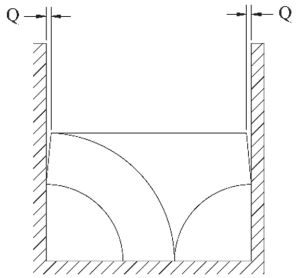

Angularity Off Angle Q

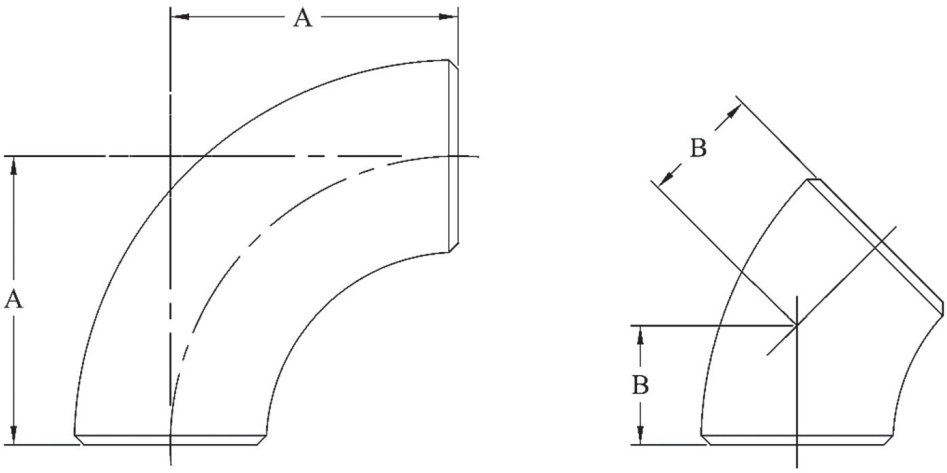

TABLE 4
Dimensions of Elbows

Dimensions are in inches

NPS	Outside Diameter at Bevel	Center-to-End				
		Short Radius	Long Radius		3 Radius	
		90° - A	45° - B	90° - A	45° - B	90° - A
16	16.00	16.00	10.00	24.00	19.88	48.00
18	18.00	18.00	11.25	27.00	22.38	54.00
20	20.00	20.00	12.50	30.00	24.88	60.00
22	22.00	22.00	13.50	33.00	27.31	66.00
24	24.00	24.00	15.00	36.00	29.81	72.00
26	26.00	26.00	16.00	39.00	32.31	78.00
28	28.00	28.00	17.25	42.00	34.75	84.00
30	30.00	30.00	18.50	45.00	37.25	90.00
32	32.00	32.00	19.75	48.00	39.75	96.00
34	34.00	34.00	21.00	51.00	42.25	102.00
36	36.00	36.00	22.25	54.00	44.69	108.00
38	38.00	38.00	23.62	57.00	47.25	114.00
40	40.00	40.00	24.88	60.00	49.75	120.00
42	42.00	42.00	26.00	63.00	52.19	126.00
44	44.00	44.00	27.38	66.00	54.69	132.00
46	46.00	46.00	28.62	69.00	57.19	138.00
48	48.00	48.00	29.88	72.00	59.69	144.00
50	50.00	50.00	31.00	75.00	62.12	150.00
52	52.00	52.00	32.25	78.00	64.62	156.00
54	54.00	54.00	33.50	81.00	67.12	162.00
56	56.00	56.00	34.75	84.00	69.56	168.00
58	58.00	58.00	36.00	87.00	72.06	174.00
60	60.00	60.00	37.25	90.00	74.56	180.00

GENERAL NOTE: The B dimensions for other angles not listed in the table shall be determined as follows:

$$B = A * \tan(Ø/2)$$

Where:

B = Center-to-End dimension for any angle elbow not covered in Table 4;
A = Dimension A for appropriate 90-deg elbow in Table 4;
$Ø$ = Angle of elbow.

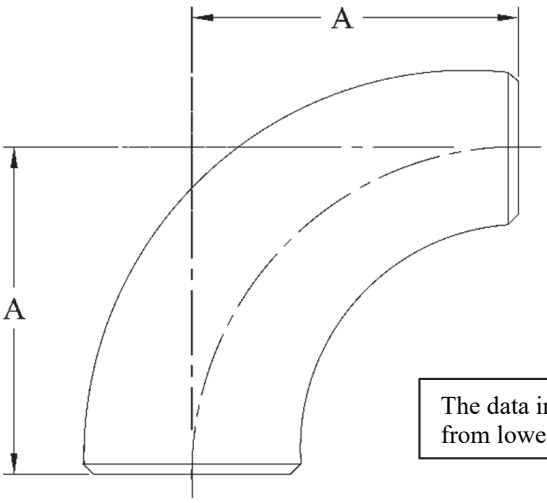

The data in this table has been reordered from lowest to highest NPS values.

TABLE 5
Dimensions of Reducing Elbows

Dimensions are in inches

NPS	Outside Diameter at Bevel		Center-to-End
	Large End	Small End	90° - A
16 x 8	16.00	8.63	24.00
16 x 10	16.00	10.75	24.00
16 x 12	16.00	12.75	24.00
16 x 14	16.00	14.00	24.00
18 x 10	18.00	10.75	27.00
18 x 12	18.00	12.75	27.00
18 x 14	18.00	14.00	27.00
18 x 16	18.00	16.00	27.00
20 x 10	20.00	10.75	30.00
20 x 12	20.00	12.75	30.00
20 x 14	20.00	14.00	30.00
20 x 16	20.00	16.00	30.00
20 x 18	20.00	18.00	30.00
22 x 12	22.00	12.75	33.00
22 x 14	22.00	14.00	33.00
22 x 16	22.00	16.00	33.00
22 x 18	22.00	18.00	33.00
22 x 20	22.00	20.00	33.00
24 x 12	24.00	12.75	36.00
24 x 14	24.00	14.00	36.00
24 x 16	24.00	16.00	36.00
24 x 18	24.00	18.00	36.00
24 x 20	24.00	20.00	36.00
24 x 22	24.00	22.00	36.00
26 x 14	26.00	14.00	39.00
26 x 16	26.00	16.00	39.00
26 x 18	26.00	18.00	39.00
26 x 20	26.00	20.00	39.00
26 x 22	26.00	22.00	39.00
26 x 24	26.00	24.00	39.00

Dimensions are in inches

NPS	Outside Diameter at Bevel		Center-to-End
	Large End	Small End	90° - A
28 x 14	28.00	14.00	42.00
28 x 16	28.00	16.00	42.00
28 x 18	28.00	18.00	42.00
28 x 20	28.00	20.00	42.00
28 x 22	28.00	22.00	42.00
28 x 24	28.00	24.00	42.00
28 x 26	28.00	26.00	42.00
30 x 16	30.00	16.00	45.00
30 x 18	30.00	18.00	45.00
30 x 20	30.00	20.00	45.00
30 x 22	30.00	22.00	45.00
30 x 24	30.00	24.00	45.00
30 x 26	30.00	26.00	45.00
30 x 28	30.00	28.00	45.00
32 x 16	32.00	16.00	48.00
32 x 18	32.00	18.00	48.00
32 x 20	32.00	20.00	48.00
32 x 22	32.00	22.00	48.00
32 x 24	32.00	24.00	48.00
32 x 26	32.00	26.00	48.00
32 x 28	32.00	28.00	48.00
32 x 30	32.00	30.00	48.00
34 x 18	34.00	18.00	51.00
34 x 20	34.00	20.00	51.00
34 x 22	34.00	22.00	51.00
34 x 24	34.00	24.00	51.00
34 x 26	34.00	26.00	51.00
34 x 28	34.00	28.00	51.00
34 x 30	34.00	30.00	51.00
34 x 32	34.00	32.00	51.00

(*continued on next page*)

TABLE 5

(*continued*)

Dimensions of Reducing Elbows

Dimensions are in inches

NPS	Outside Diameter at Bevel		Center-to-End
	Large End	Small End	90° - A
36 x 18	36.00	18.00	54.00
36 x 20	36.00	20.00	54.00
36 x 22	36.00	22.00	54.00
36 x 24	36.00	24.00	54.00
36 x 26	36.00	26.00	54.00
36 x 28	36.00	28.00	54.00
36 x 30	36.00	30.00	54.00
36 x 32	36.00	32.00	54.00
36 x 34	36.00	34.00	54.00
38 x 20	38.00	20.00	57.00
38 x 22	38.00	22.00	57.00
38 x 24	38.00	24.00	57.00
38 x 26	38.00	26.00	57.00
38 x 28	38.00	28.00	57.00
38 x 30	38.00	30.00	57.00
38 x 32	38.00	32.00	57.00
38 x 34	38.00	34.00	57.00
38 x 36	38.00	36.00	57.00
40 x 20	40.00	20.00	60.00
40 x 22	40.00	22.00	60.00
40 x 24	40.00	24.00	60.00
40 x 26	40.00	26.00	60.00
40 x 28	40.00	28.00	60.00
40 x 30	40.00	30.00	60.00
40 x 32	40.00	32.00	60.00
40 x 34	40.00	34.00	60.00
40 x 36	40.00	36.00	60.00
40 x 38	40.00	38.00	60.00
42 x 22	42.00	22.00	63.00
42 x 24	42.00	24.00	63.00
42 x 26	42.00	26.00	63.00
42 x 28	42.00	28.00	63.00
42 x 30	42.00	30.00	63.00
42 x 32	42.00	32.00	63.00
42 x 34	42.00	34.00	63.00
42 x 36	42.00	36.00	63.00
42 x 38	42.00	38.00	63.00
42 x 40	42.00	40.00	63.00
44 x 22	44.00	22.00	66.00
44 x 24	44.00	24.00	66.00
44 x 26	44.00	26.00	66.00
44 x 28	44.00	28.00	66.00
44 x 30	44.00	30.00	66.00
44 x 32	44.00	32.00	66.00
44 x 34	44.00	34.00	66.00
44 x 36	44.00	36.00	66.00
44 x 38	44.00	38.00	66.00
44 x 40	44.00	40.00	66.00
44 x 42	44.00	42.00	66.00

Dimensions are in inches

NPS	Outside Diameter at Bevel		Center-to-End
	Large End	Small End	90° - A
46 x 24	46.00	24.00	69.00
46 x 26	46.00	26.00	69.00
46 x 28	46.00	28.00	69.00
46 x 30	46.00	30.00	69.00
46 x 32	46.00	32.00	69.00
46 x 34	46.00	34.00	69.00
46 x 36	46.00	36.00	69.00
46 x 38	46.00	38.00	69.00
46 x 40	46.00	40.00	69.00
46 x 42	46.00	42.00	69.00
46 x 44	46.00	44.00	69.00
48 x 24	48.00	24.00	72.00
48 x 26	48.00	26.00	72.00
48 x 28	48.00	28.00	72.00
48 x 30	48.00	30.00	72.00
48 x 32	48.00	32.00	72.00
48 x 34	48.00	34.00	72.00
48 x 36	48.00	36.00	72.00
48 x 38	48.00	38.00	72.00
48 x 40	48.00	40.00	72.00
48 x 42	48.00	42.00	72.00
48 x 44	48.00	44.00	72.00
48 x 46	48.00	46.00	72.00
50 x 26	50.00	26.00	75.00
50 x 28	50.00	28.00	75.00
50 x 30	50.00	30.00	75.00
50 x 32	50.00	32.00	75.00
50 x 34	50.00	34.00	75.00
50 x 36	50.00	36.00	75.00
50 x 38	50.00	38.00	75.00
50 x 40	50.00	40.00	75.00
50 x 42	50.00	42.00	75.00
50 x 44	50.00	44.00	75.00
50 x 46	50.00	46.00	75.00
50 x 48	50.00	48.00	75.00
52 x 26	52.00	26.00	78.00
52 x 28	52.00	28.00	78.00
52 x 30	52.00	30.00	78.00
52 x 32	52.00	32.00	78.00
52 x 34	52.00	34.00	78.00
52 x 36	52.00	36.00	78.00
52 x 38	52.00	38.00	38.00
52 x 40	52.00	40.00	78.00
52 x 42	52.00	42.00	78.00
52 x 44	52.00	44.00	78.00
52 x 46	52.00	46.00	78.00
52 x 48	52.00	48.00	78.00
52 x 50	52.00	50.00	78.00

(*continued on next page*)

TABLE 5

(*continued*)

Dimensions of Reducing Elbows

Dimensions are in inches

NPS	Outside Diameter at Bevel		Center-to-End
	Large End	Small End	90° - A
54 x 28	54.00	28.00	81.00
54 x 30	54.00	30.00	81.00
54 x 32	54.00	32.00	81.00
54 x 34	54.00	34.00	81.00
54 x 36	54.00	36.00	81.00
54 x 38	54.00	38.00	81.00
54 x 40	54.00	40.00	81.00
54 x 42	54.00	42.00	81.00
54 x 44	54.00	44.00	81.00
54 x 46	54.00	46.00	81.00
54 x 48	54.00	48.00	81.00
54 x 50	54.00	50.00	81.00
54 x 52	54.00	52.00	81.00
56 x 28	56.00	28.00	84.00
56 x 30	56.00	30.00	84.00
56 x 32	56.00	32.00	84.00
56 x 34	56.00	34.00	84.00
56 x 36	56.00	36.00	84.00
56 x 38	56.00	38.00	84.00
56 x 40	56.00	40.00	84.00
56 x 42	56.00	42.00	84.00
56 x 44	56.00	44.00	84.00
56 x 46	56.00	46.00	84.00
56 x 48	56.00	48.00	84.00
56 x 50	56.00	50.00	84.00
56 x 52	56.00	52.00	84.00
56 x 54	56.00	54.00	84.00

Dimensions are in inches

NPS	Outside Diameter at Bevel		Center-to-End
	Large End	Small End	90° - A
58 x 30	58.00	30.00	87.00
58 x 32	58.00	32.00	87.00
58 x 34	58.00	34.00	87.00
58 x 36	58.00	36.00	87.00
58 x 38	58.00	38.00	87.00
58 x 40	58.00	40.00	87.00
58 x 42	58.00	42.00	87.00
58 x 44	58.00	44.00	87.00
58 x 46	58.00	46.00	87.00
58 x 48	58.00	48.00	87.00
58 x 50	58.00	50.00	87.00
58 x 52	58.00	52.00	87.00
58 x 54	58.00	54.00	87.00
58 x 56	58.00	56.00	87.00
60 x 30	60.00	30.00	90.00
60 x 32	60.00	32.00	90.00
60 x 34	60.00	34.00	90.00
60 x 36	60.00	36.00	90.00
60 x 38	60.00	38.00	90.00
60 x 40	60.00	40.00	90.00
60 x 42	60.00	42.00	90.00
60 x 44	60.00	44.00	90.00
60 x 46	60.00	46.00	90.00
60 x 48	60.00	48.00	90.00
60 x 50	60.00	50.00	90.00
60 x 52	60.00	52.00	90.00
60 x 54	60.00	54.00	90.00
60 x 56	60.00	56.00	90.00
60 x 58	60.00	58.00	90.00

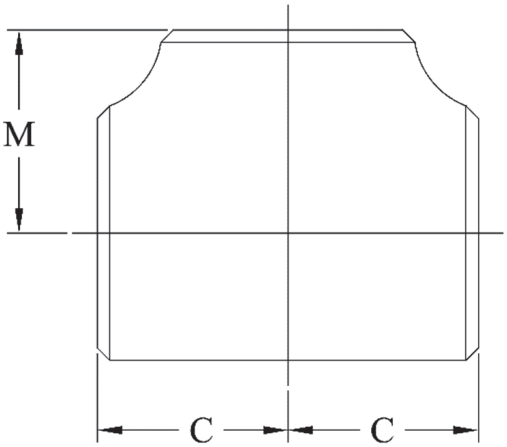

TABLE 6
Dimensions of Straight Tees

Dimensions are in inches

NPS	Outside Diameter at Bevel	Center-to-End	
		Run-C	Outlet-M[a]
16	16.00	12.00	12.00
18	18.00	13.50	13.50
20	20.00	15.00	15.00
22	22.00	16.50	16.50
24	24.00	17.00	17.00
26	26.00	19.50	19.50
28	28.00	20.50	20.50
30	30.00	22.00	22.00
32	32.00	23.50	23.50
34	34.00	25.00	25.00
36	36.00	26.50	26.50
38	38.00	28.00	28.00
40	40.00	29.50	29.50
42	42.00	30.00	28.00
44	44.00	32.00	30.00
46	46.00	33.50	31.50
48	48.00	35.00	33.00
50	50.00	36.75	34.50
52	52.00	38.50	35.75
54	54.00	40.00	37.25
56	56.00	41.50	38.50
58	58.00	43.00	40.00
60	60.00	44.00	41.50

NOTE: (a) Outlet Dimension “M” is recommended but not mandatory (consult fitting manufacturer).

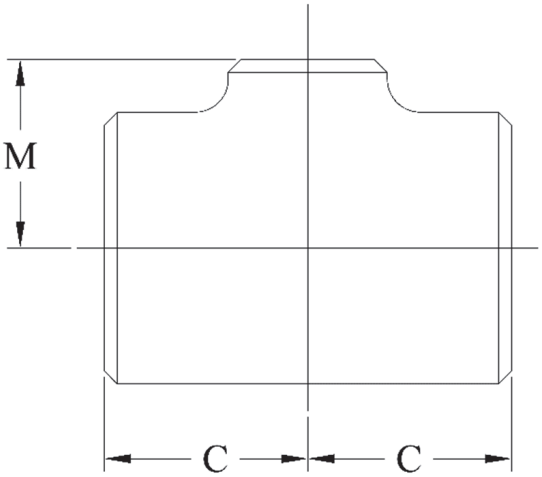

The data in this table has been reordered from lowest to highest NPS values.

TABLE 7
Dimensions of Reducing Outlet Tees

Dimensions are in inches

NPS	Outside Diameter at Bevel		Center-to-End	
	Run	Outlet	Run-C	Outlet-M[a]
16 x 16 x 6	16.00	6.62	12.00	10.38
16 x 16 x 8	16.00	8.62	12.00	10.75
16 x 16 x 10	16.00	10.75	12.00	11.12
16 x 16 x 12	16.00	12.75	12.00	11.62
16 x 16 x 14	16.00	14.00	12.00	12.00
18 x 18 x 8	18.00	8.62	13.50	11.75
18 x 18 x 10	18.00	10.75	13.50	12.12
18 x 18 x 12	18.00	12.75	13.50	12.62
18 x 18 x 14	18.00	14.00	13.50	13.00
18 x 18 x 16	18.00	16.00	13.50	13.00
20 x 20 x 8	20.00	8.62	15.00	12.75
20 x 20 x 10	20.00	10.75	15.00	13.12
20 x 20 x 12	20.00	12.75	15.00	13.62
20 x 20 x 14	20.00	14.00	15.00	14.00
20 x 20 x 16	20.00	16.00	15.00	14.00
20 x 20 x 18	20.00	18.00	15.00	14.50
22 x 22 x 10	22.00	10.75	16.50	14.12
22 x 22 x 12	22.00	12.75	16.50	14.62
22 x 22 x 14	22.00	14.00	16.50	15.00
22 x 22 x 16	22.00	16.00	16.50	15.00
22 x 22 x 18	22.00	18.00	16.50	15.50
22 x 22 x 20	22.00	20.00	16.50	16.00
24 x 24 x 10	24.00	10.75	17.00	15.12
24 x 24 x 12	24.00	12.75	17.00	15.62
24 x 24 x 14	24.00	14.00	17.00	16.00
24 x 24 x 16	24.00	16.00	17.00	16.00
24 x 24 x 18	24.00	18.00	17.00	16.50
24 x 24 x 20	24.00	20.00	17.00	17.00
24 x 24 x 22	24.00	22.00	17.00	17.00

Dimensions are in inches

NPS	Outside Diameter at Bevel		Center-to-End	
	Run	Outlet	Run-C	Outlet-M[a]
26 x 26 x 12	26.00	12.75	19.50	16.62
26 x 26 x 14	26.00	14.00	19.50	17.00
26 x 26 x 16	26.00	16.00	19.50	17.00
26 x 26 x 18	26.00	18.00	19.50	17.50
26 x 26 x 20	26.00	20.00	19.50	18.00
26 x 26 x 22	26.00	22.00	19.50	18.50
26 x 26 x 24	26.00	24.00	19.50	19.00
28 x 28 x 12	28.00	12.75	20.50	17.62
28 x 28 x 14	28.00	14.00	20.50	18.00
28 x 28 x 16	28.00	16.00	20.50	18.00
28 x 28 x 18	28.00	18.00	20.50	18.50
28 x 28 x 20	28.00	20.00	20.50	19.00
28 x 28 x 22	28.00	22.00	20.50	19.50
28 x 28 x 24	28.00	24.00	20.50	20.00
28 x 28 x 26	28.00	26.00	20.50	20.50
30 x 30 x 10	30.00	10.75	22.00	18.12
30 x 30 x 12	30.00	12.75	22.00	18.62
30 x 30 x 14	30.00	14.00	22.00	19.00
30 x 30 x 16	30.00	16.00	22.00	19.00
30 x 30 x 18	30.00	18.00	22.00	19.50
30 x 30 x 20	30.00	20.00	22.00	20.00
30 x 30 x 22	30.00	22.00	22.00	20.50
30 x 30 x 24	30.00	24.00	22.00	21.00
30 x 30 x 26	30.00	26.00	22.00	21.50
30 x 30 x 28	30.00	28.00	22.00	21.50

(*continued on next page*)

TABLE 7

(*continued*)

Dimensions of Reducing Outlet Tees

Dimensions are in inches

NPS	Outside Diameter at Bevel		Center-to-End	
	Run	Outlet	Run-C	Outlet-M[(a)]
32 x 32 x 14	32.00	14.00	23.50	20.00
32 x 32 x 16	32.00	16.00	23.50	20.00
32 x 32 x 18	32.00	18.00	23.50	20.50
32 x 32 x 20	32.00	20.00	23.50	21.00
32 x 32 x 22	32.00	22.00	23.50	21.50
32 x 32 x 24	32.00	24.00	23.50	22.00
32 x 32 x 26	32.00	26.00	23.50	22.50
32 x 32 x 28	32.00	28.00	23.50	22.50
32 x 32 x 30	32.00	30.00	23.50	23.00
34 x 34 x 16	34.00	16.00	25.00	21.00
34 x 34 x 18	34.00	18.00	25.00	21.50
34 x 34 x 20	34.00	20.00	25.00	22.00
34 x 34 x 22	34.00	22.00	25.00	22.50
34 x 34 x 24	34.00	24.00	25.00	23.00
34 x 34 x 26	34.00	26.00	25.00	23.50
34 x 34 x 28	34.00	28.00	25.00	23.50
34 x 34 x 30	34.00	30.00	25.00	24.00
34 x 34 x 32	34.00	32.00	25.00	24.50
36 x 36 x 16	36.00	16.00	26.50	22.00
36 x 36 x 18	36.00	18.00	26.50	22.50
36 x 36 x 20	36.00	20.00	26.50	23.00
36 x 36 x 22	36.00	22.00	26.50	23.50
36 x 36 x 24	36.00	24.00	26.50	24.00
36 x 36 x 26	36.00	26.00	26.50	24.50
36 x 36 x 28	36.00	28.00	26.50	24.50
36 x 36 x 30	36.00	30.00	26.50	25.00
36 x 36 x 32	36.00	32.00	26.50	25.50
36 x 36 x 34	36.00	34.00	26.50	26.00
38 x 38 x 18	38.00	18.00	28.00	23.50
38 x 38 x 20	38.00	20.00	28.00	24.00
38 x 38 x 22	38.00	22.00	28.00	24.50
38 x 38 x 24	38.00	24.00	28.00	25.00
38 x 38 x 26	38.00	26.00	28.00	25.50
38 x 38 x 28	38.00	28.00	28.00	25.50
38 x 38 x 30	38.00	30.00	28.00	26.50
38 x 38 x 32	38.00	32.00	28.00	27.00
38 x 38 x 22	38.00	22.00	28.00	24.50
38 x 38 x 34	38.00	34.00	28.00	27.50
38 x 38 x 36	38.00	36.00	28.00	28.00

Dimensions are in inches

NPS	Outside Diameter at Bevel		Center-to-End	
	Run	Outlet	Run-C	Outlet-M[(a)]
40 x 40 x 18	40.00	18.00	29.50	24.50
40 x 40 x 20	40.00	20.00	29.50	25.00
40 x 40 x 22	40.00	22.00	29.50	25.50
40 x 40 x 24	40.00	24.00	29.50	26.00
40 x 40 x 26	40.00	26.00	29.50	26.50
40 x 40 x 28	40.00	28.00	29.50	26.50
40 x 40 x 30	40.00	30.00	29.50	27.50
40 x 40 x 32	40.00	32.00	29.50	28.00
40 x 40 x 34	40.00	34.00	29.50	28.50
40 x 40 x 36	40.00	36.00	29.50	29.00
40 x 40 x 38	40.00	38.00	29.50	29.50
42 x 42 x 16	42.00	16.00	30.00	25.00
42 x 42 x 18	42.00	18.00	30.00	25.50
42 x 42 x 20	42.00	20.00	30.00	26.00
42 x 42 x 22	42.00	22.00	30.00	26.00
42 x 42 x 24	42.00	24.00	30.00	26.00
42 x 42 x 26	42.00	26.00	30.00	27.50
42 x 42 x 28	42.00	28.00	30.00	27.50
42 x 42 x 30	42.00	30.00	30.00	28.00
42 x 42 x 32	42.00	32.00	30.00	28.00
42 x 42 x 34	42.00	34.00	30.00	28.00
42 x 42 x 36	42.00	36.00	30.00	28.00
44 x 44 x 20	44.00	20.00	32.00	27.00
44 x 44 x 22	44.00	22.00	32.00	27.00
44 x 44 x 24	44.00	24.00	32.00	27.50
44 x 44 x 26	44.00	26.00	32.00	27.50
44 x 44 x 28	44.00	28.00	32.00	27.50
44 x 44 x 30	44.00	30.00	32.00	28.00
44 x 44 x 32	44.00	32.00	32.00	28.00
44 x 44 x 34	44.00	34.00	32.00	28.50
44 x 44 x 36	44.00	36.00	32.00	28.50
44 x 44 x 38	44.00	38.00	32.00	29.00
44 x 44 x 40	44.00	40.00	32.00	29.50
44 x 44 x 42	44.00	42.00	32.00	30.00

(*continued on next page*)

TABLE 7

(*continued*)

Dimensions of Reducing Outlet Tees

Dimensions are in inches

NPS	Outside Diameter at Bevel		Center-to-End	
	Run	Outlet	Run-C	Outlet-M[(a)]
46 x 46 x 22	46.00	22.00	33.50	28.50
46 x 46 x 24	46.00	24.00	33.50	28.50
46 x 46 x 26	46.00	26.00	33.50	29.00
46 x 46 x 28	46.00	28.00	33.50	29.00
46 x 46 x 30	46.00	30.00	33.50	29.00
46 x 46 x 32	46.00	32.00	33.50	29.50
46 x 46 x 34	46.00	34.00	33.50	29.50
46 x 46 x 36	46.00	36.00	33.50	30.00
46 x 46 x 38	46.00	38.00	33.50	30.00
46 x 46 x 40	46.00	40.00	33.50	30.50
46 x 46 x 42	46.00	42.00	33.50	31.00
46 x 46 x 44	46.00	44.00	33.50	31.50
48 x 48 x 16	48.00	16.00	35.00	28.00
48 x 48 x 18	48.00	18.00	35.00	28.50
48 x 48 x 20	48.00	20.00	35.00	29.00
48 x 48 x 22	48.00	22.00	35.00	29.00
48 x 48 x 24	48.00	24.00	35.00	29.00
48 x 48 x 26	48.00	26.00	35.00	30.00
48 x 48 x 28	48.00	28.00	35.00	30.00
48 x 48 x 30	48.00	30.00	35.00	30.00
48 x 48 x 32	48.00	32.00	35.00	31.00
48 x 48 x 34	48.00	34.00	35.00	31.00
48 x 48 x 36	48.00	36.00	35.00	31.00
48 x 48 x 38	48.00	38.00	35.00	32.00
48 x 48 x 40	48.00	40.00	35.00	32.00
48 x 48 x 42	48.00	42.00	35.00	32.00
48 x 48 x 44	48.00	44.00	35.00	33.00
48 x 48 x 46	48.00	46.00	35.00	33.00
50 x 50 x 20	50.00	20.00	36.75	30.00
50 x 50 x 24	50.00	24.00	36.75	30.00
50 x 50 x 30	50.00	30.00	36.75	31.50
50 x 50 x 36	50.00	36.00	36.75	32.50
50 x 50 x 42	50.00	42.00	36.75	33.00
50 x 50 x 48	50.00	48.00	36.75	34.50

Dimensions are in inches

NPS	Outside Diameter at Bevel		Center-to-End	
	Run	Outlet	Run-C	Outlet-M[(a)]
52 x 52 x 24	52.00	24.00	38.50	31.25
52 x 52 x 30	52.00	30.00	38.50	32.75
52 x 52 x 36	52.00	36.00	38.50	34.00
52 x 52 x 42	52.00	42.00	38.50	34.50
52 x 52 x 48	52.00	48.00	38.50	35.75
52 x 52 x 50	52.00	50.00	38.50	35.75
54 x 54 x 24	54.00	24.00	40.00	31.38
54 x 54 x 30	54.00	30.00	40.00	34.00
54 x 54 x 36	54.00	36.00	40.00	35.00
54 x 54 x 42	54.00	42.00	40.00	35.63
54 x 54 x 48	54.00	48.00	40.00	37.25
54 x 54 x 52	54.00	52.00	40.00	37.25
56 x 56 x 24	56.00	24.00	41.50	33.75
56 x 56 x 30	56.00	30.00	41.50	33.75
56 x 56 x 36	56.00	36.00	41.50	35.50
56 x 56 x 42	56.00	42.00	41.50	36.50
56 x 56 x 48	56.00	48.00	41.50	37.00
56 x 56 x 54	56.00	54.00	41.50	38.50
58 x 58 x 30	58.00	30.00	43.00	35.00
58 x 58 x 36	58.00	36.00	43.00	36.50
58 x 58 x 42	58.00	42.00	43.00	37.50
58 x 58 x 48	58.00	48.00	43.00	38.50
58 x 58 x 54	58.00	54.00	43.00	40.00
58 x 58 x 56	58.00	56.00	43.00	40.00
60 x 60 x 30	60.00	30.00	44.00	36.00
60 x 60 x 36	60.00	36.00	44.00	38.00
60 x 60 x 42	60.00	42.00	44.00	39.00
60 x 60 x 48	60.00	48.00	44.00	40.00
60 x 60 x 54	60.00	54.00	44.00	40.50
60 x 60 x 58	60.00	58.00	44.00	41.50

NOTE: (a) Outlet Dimension "M" is recommended but not mandatory (consult fitting manufacturer).

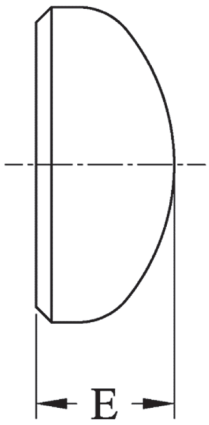

TABLE 8
Dimensions of Caps [a]

Dimensions are in inches

NPS	Outside Diameter at Bevel	End-to-End	
		E	E1[b]
16	16.00	7.00	8.00
18	18.00	8.00	9.00
20	20.00	9.00	10.00
22	22.00	10.00	11.00
24	24.00	10.50	12.00
26	26.00	10.50	12.00
28	28.00	10.50	12.00
30	30.00	10.50	12.00
32	32.00	10.50	12.00
34	34.00	10.50	12.00
36	36.00	10.50	12.00
38	38.00	12.00	13.50
40	40.00	12.00	13.50
42	42.00	12.00	13.50
44	44.00	13.50	15.00
46	46.00	13.50	15.00
48	48.00	13.50	15.00
50	50.00	14.50	16.00
52	52.00	14.50	16.00
54	54.00	16.00	17.50
56	56.00	16.00	17.50
58	58.00	16.50	18.00
60	60.00	16.50	18.00

NOTES:

(a) The shape of these caps shall be ellipsoidal and shall conform to the shape requirements as given in the ASME BPVC.

(b) For *t* greater than 1.0 inch, caps may be furnished to length "E1", at option of manufacturer.

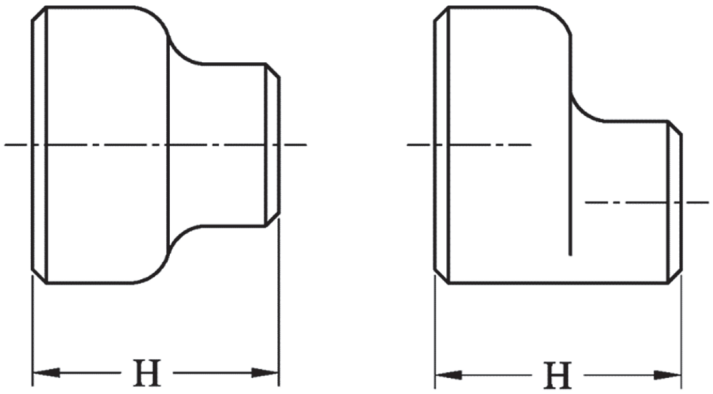

TABLE 9
Dimensions of Reducers

The data in this table has been reordered from lowest to highest NPS values.

Dimensions are in inches

NPS	Outside Diameter at Bevel		End-to-End
	Large End	Small End	Length H
16 x 8	16.00	8.62	14.00
16 x 10	16.00	10.75	14.00
16 x 12	16.00	12.75	14.00
16 x 14	16.00	14.00	14.00
18 x 10	18.00	10.75	15.00
18 x 12	18.00	12.75	15.00
18 x 14	18.00	14.00	15.00
18 x 16	18.00	16.00	15.00
20 x 12	20.00	12.75	20.00
20 x 14	20.00	14.00	20.00
20 x 16	20.00	16.00	20.00
20 x 18	20.00	18.00	20.00
22 x 14	22.00	14.00	20.00
22 x 16	22.00	16.00	20.00
22 x 18	22.00	18.00	20.00
22 x 20	22.00	20.00	20.00
24 x 16	24.00	16.00	20.00
24 x 18	24.00	18.00	20.00
24 x 20	24.00	20.00	20.00
24 x 22	24.00	22.00	20.00
26 x 18	26.00	18.00	24.00
26 x 20	26.00	20.00	24.00
26 x 22	26.00	22.00	24.00
26 x 24	26.00	24.00	24.00
28 x 18	28.00	18.00	24.00
28 x 20	28.00	20.00	24.00
28 x 22	28.00	22.00	24.00
28 x 24	28.00	24.00	24.00
28 x 26	28.00	26.00	24.00
30 x 20	30.00	20.00	24.00
30 x 22	30.00	22.00	24.00
30 x 24	30.00	24.00	24.00
30 x 26	30.00	26.00	24.00
30 x 28	30.00	28.00	24.00

Dimensions are in inches

NPS	Outside Diameter at Bevel		End-to-End
	Large End	Small End	Length H
32 x 24	32.00	24.00	24.00
32 x 26	32.00	26.00	24.00
32 x 28	32.00	28.00	24.00
32 x 30	32.00	30.00	24.00
34 x 24	34.00	24.00	24.00
34 x 26	34.00	26.00	24.00
34 x 28	34.00	28.00	24.00
34 x 30	34.00	30.00	24.00
34 x 32	34.00	32.00	24.00
36 x 24	36.00	24.00	24.00
36 x 26	36.00	26.00	24.00
36 x 28	36.00	28.00	24.00
36 x 30	36.00	30.00	24.00
36 x 32	36.00	32.00	24.00
36 x 34	36.00	34.00	24.00
38 x 20	38.00	20.00	24.00
38 x 22	38.00	22.00	24.00
38 x 24	38.00	24.00	24.00
38 x 26	38.00	26.00	24.00
38 x 28	38.00	28.00	24.00
38 x 30	38.00	30.00	24.00
38 x 32	38.00	32.00	24.00
38 x 34	38.00	34.00	24.00
38 x 36	38.00	36.00	24.00
40 x 20	40.00	20.00	24.00
40 x 22	40.00	22.00	24.00
40 x 24	40.00	24.00	24.00
40 x 26	40.00	26.00	24.00
40 x 28	40.00	28.00	24.00
40 x 30	40.00	30.00	24.00
40 x 32	40.00	32.00	24.00
40 x 34	40.00	34.00	24.00
40 x 36	40.00	36.00	24.00
40 x 38	40.00	38.00	24.00

(*continued on next page*)

TABLE 9

(*continued*)

Dimensions of Reducers

Dimensions are in inches

NPS	Outside Diameter at Bevel		End-to-End
	Large End	Small End	Length H
42 x 22	42.00	22.00	24.00
42 x 24	42.00	24.00	24.00
42 x 26	42.00	26.00	24.00
42 x 28	42.00	28.00	24.00
42 x 30	42.00	30.00	24.00
42 x 32	42.00	32.00	24.00
42 x 34	42.00	34.00	24.00
42 x 36	42.00	36.00	24.00
42 x 38	42.00	38.00	24.00
42 x 40	42.00	40.00	24.00
44 x 22	44.00	22.00	24.00
44 x 24	44.00	24.00	24.00
44 x 26	44.00	26.00	24.00
44 x 28	44.00	28.00	24.00
44 x 30	44.00	30.00	24.00
44 x 32	44.00	32.00	24.00
44 x 34	44.00	34.00	24.00
44 x 36	44.00	36.00	24.00
44 x 38	44.00	38.00	24.00
44 x 40	44.00	40.00	24.00
44 x 42	44.00	42.00	24.00
46 x 24	46.00	24.00	28.00
46 x 26	46.00	26.00	28.00
46 x 28	46.00	28.00	28.00
46 x 30	46.00	30.00	28.00
46 x 32	46.00	32.00	28.00
46 x 34	46.00	34.00	28.00
46 x 36	46.00	36.00	28.00
46 x 38	46.00	38.00	28.00
46 x 40	46.00	40.00	28.00
46 x 42	46.00	42.00	28.00
46 x 44	46.00	44.00	28.00
48 x 24	48.00	24.00	28.00
48 x 26	48.00	26.00	28.00
48 x 28	48.00	28.00	28.00
48 x 30	48.00	30.00	28.00
48 x 32	48.00	32.00	28.00
48 x 34	48.00	34.00	28.00
48 x 36	48.00	36.00	28.00
48 x 38	48.00	38.00	28.00
48 x 40	48.00	40.00	28.00
48 x 42	48.00	42.00	28.00
48 x 44	48.00	44.00	28.00
48 x 46	48.00	46.00	28.00

Dimensions are in inches

NPS	Outside Diameter at Bevel		End-to-End
	Large End	Small End	Length H
50 x 20	50.00	20.00	28.00
50 x 24	50.00	24.00	28.00
50 x 30	50.00	30.00	28.00
50 x 36	50.00	36.00	28.00
50 x 42	50.00	42.00	28.00
50 x 48	50.00	48.00	28.00
52 x 24	52.00	24.00	28.00
52 x 30	52.00	30.00	28.00
52 x 36	52.00	36.00	28.00
52 x 42	52.00	42.00	28.00
52 x 48	52.00	48.00	28.00
52 x 50	52.00	50.00	28.00
54 x 24	54.00	24.00	28.00
54 x 30	54.00	30.00	28.00
54 x 36	54.00	36.00	28.00
54 x 42	54.00	42.00	28.00
54 x 48	54.00	48.00	28.00
54 x 52	54.00	52.00	28.00
56 x 24	56.00	24.00	28.00
56 x 30	56.00	30.00	28.00
56 x 36	56.00	36.00	28.00
56 x 42	56.00	42.00	28.00
56 x 48	56.00	48.00	28.00
56 x 54	56.00	54.00	28.00
58 x 30	58.00	30.00	28.00
58 x 36	58.00	36.00	28.00
58 x 42	58.00	42.00	28.00
58 x 48	58.00	48.00	28.00
58 x 54	58.00	54.00	28.00
58 x 56	58.00	56.00	28.00
60 x 30	60.00	30.00	28.00
60 x 36	60.00	36.00	28.00
60 x 42	60.00	42.00	28.00
60 x 48	60.00	48.00	28.00
60 x 54	60.00	54.00	28.00
60 x 58	60.00	58.00	28.00

ANNEX A

Referenced Standards and Applicable Dates

This Annex is an integral part of this Standard Practice and is placed after the main text for convenience.

Standard Name	Description
API	
SPEC 5L-2018	Specification for Line Pipe; incl. Errata 1 (2018)
ASME; ANSI/ASME	
B16.9-2018	Factory-Made Wrought Buttwelding Fittings
B31.x	[applicable] Code for Pressure Piping
B31.3-2018	Process Piping
BPVC-	Boiler and Pressure Vessel Code
V-2019	Section V: Nondestructive Examination
VIII.1-2019	Section VIII, Division 1: Rules for Construction of Pressure Vessels
VIII.2-2019	Section VIII, Division 2: Rules for Construction of Pressure Vessels – Alternative Rules
IX-2019	Section IX: Welding and Brazing Qualifications
ASTM	
A370-19e1	Standard Test Methods and Definitions for Mechanical Testing of Steel Products
A751-14a	Standard Test Methods, Practices, and Terminology for Chemical Analysis of Steel Products
A991/A991M-17	Standard Test Method for Conducting Temperature Uniformity Surveys of Furnaces Used to Heat Treat Steel Products
NACE/ISO	
MR0175/ISO15156-2015	Petroleum, petrochemical and natural gas industries – Materials for use in H2S-containing environments in oil and gas production
SAE	
AMS 2750E-2012	Pyrometry

ANNEX A

Referenced Standards and Applicable Dates

The following organizations appear in the list on the previous page of this Annex or are generally referenced within this Standard Practice:

ANSI	American National Standards Institute 25 West 43rd Street, Fourth Floor New York, NY 10036-7406
API	American Petroleum Institute 1220 L Street, N.W. Washington, D.C. 20005-4070
ASME	American Society of Mechanical Engineers (ASME International) Two Park Avenue New York, NY 10016-5990
ASTM	ASTM International 100 Bar Harbor Drive, P.O. Box C700 West Conshohocken, PA 19428-2959
ISO	International Organization for Standardization Central Secretariat, Chemin de Blandonnet 8, Case Postale 401, 1214 Vernier, Geneva, Switzerland
MSS	Manufacturers Standardization Society of the Valve and Fittings Industry, Inc. 127 Park Street, NE Vienna, VA 22180-4602
NACE	National Association of Corrosion Engineers (NACE International) 15835 Park Ten Place, Houston, TX 77084-4906
SAE	SAE International 400 Commonwealth Dr Warrendale, PA 15096-0001

This Page Intentionally Left Blank

Manufacturers Standardization Society of the Valve and Fittings Industry

APPENDIX X1

This Appendix is supplementary and does not include mandatory requirements.

SUPPLEMENTARY REQUIREMENTS

The supplementary requirements SR-1 through SR-24 are not applicable to product furnished to this Standard Practice, except when specified on the purchase order or otherwise agreed upon. The expense or cost of supplementary requirements shall be for the purchaser's account unless specified on the purchase order or otherwise agreed upon. When specified or agreed upon, supplementary requirements shall have the same force as requirements of the first seventeen sections of this Standard Practice. To be applicable, supplementary requirement details different from those of the SRs of this appendix must be agreed upon by both the purchaser and manufacturer.

When a supplementary requirement is incorporated in the base standard or dropped the number will be retired and other supplementary requirement numbers will be retained.

a) SR-1 Longitudinal-Bead Underbead Cracking Test in accordance with Appendix X2. Tests shall be performed on each heat of material (either from the starting material or a fitting).

b) SR-2 (1) Transverse Guided-Weld Bend-Tests shall be performed on each lot of fittings produced.

(2) Transverse-weld test specimens shall be subjected to face and root-guided bend-tests. The specimens shall be approximately 1.5 in. wide, at least 6 in. long with the weld at the center and shall be machined in accordance with Figure 4. The face-bend specimen shall be bent with the inside surface of the pipe against the plunger and the root-bend specimen with the outside surface against the plunger. The dimensions of the plunger for the bending jig shall be in accordance with Figure 5 of this Standard Practice and the other dimensions shall be substantially as shown in Figure 5.

(3) The bend tests shall be acceptable if no cracks or other defects exceeding 0.12 in. in any direction are present in the weld metal or between the weld metal and the fitting metal after the bending. Cracks that originate along the edges of the specimen during testing and that are less than 0.25 in. measured in any direction, shall not be considered unless obvious defects are observed.

(4) Two weld-bend test specimens, as described in (2) above, shall be cut from a fitting from each lot or from sample plates as described in Section 8.2.

(5) If either test fails to conform to specified requirements, the manufacturer may elect to make retests on two additional specimens from the same lot, each of which shall conform to the requirements specified in (3) above. If any of these specimens fail to conform to the requirements, the manufacturer may elect to test prolongations from each of the remaining fittings in the lot.

c) *SR-3* *Deleted – Transverse weld tensile test is part of MSS SP-75, Section 8.6.*

d) SR-4 Fittings intended for sour service should be identified by the purchaser at time of order including testing and acceptance criteria. Unless otherwise agreed with purchaser, each lot of fittings for sour service shall comply with the materials and manufacturing requirements of NACE MR0175/ISO15156 Part 2, Annex A, Clause A.2.

NOTE: As written in NACE MR0175 / ISO15156 Part 1, Clause 5, it is the equipment user's responsibility to ensure that any material specified for use in their equipment is satisfactory in the service environment.

Parts shall be marked SOUR.

e) SR-5 Actual yield strength of base material shall not exceed the specified minimum yield strength by more than 20 000 psi, except Grade WPHY 52 may be up to 25 000 psi over.

f) SR-6 Notch-toughness requirements, including test temperature and/or acceptable ft-lb results, other than those specified in Section 11 shall be as agreed upon between the purchaser and the manufacturer. If testing of fittings in sizes from NPS 5 to NPS 14 is requested, the acceptance criteria in Section 11.2 shall apply unless otherwise specified.

g) *SR-7* *Deleted – Notch toughness tests are part of MSS SP-75, Section 11.*

h) SR-8 Each fitting shall be ultrasonically examined. Personnel and procedures shall be qualified in accordance with ASME BPVC, Section V, Article 5. Acceptance standards shall be as agreed upon between the purchaser and the manufacturer.

i) SR-9 Fittings furnished in accordance with this Supplementary Requirement shall have purchase order identification marked with low-stress die stamps or interrupted-dot stamps.

j) SR-10 More restrictive chemical requirements and/or a lower Carbon Equivalent shall be as agreed to by purchaser and manufacturer.

k) SR-11 Repair Welding – Base metal repair welding may be performed subject to purchaser approval.

l) SR-12 Bar Stock Fittings – Bar Stock Fittings shall not be permitted.

m) SR-13 A deposited weld-metal chemical analysis shall be performed for each classification of filler metal or each filler metal/flux classification identified in the WPS. Chemical analysis shall be furnished upon request.

n) SR-14 Butt-welding ends of fittings, including 1 inch beyond the weld bevel, shall be subjected to liquid penetrant or magnetic particle examination. Liquid, including dye, penetrant examination shall be in accordance with ASME BPVC, Section V, Article 6 with acceptance standards to ASME BPVC, Section VIII, Division 1, Appendix 8. Magnetic particle examination shall be in accordance with ASME BPVC, Section V, Article 7 with acceptance standards to ASME BPVC, Section VIII, Division 1, Appendix 6.

o) SR-15 Ultrasonic examination (UT) of butt welds in lieu of the radiographic examination (RT) specified in Section 15.1. The UT examination shall be in accordance with ASME BPVC, Section V, Article 4. Longitudinal weld seams shall meet the acceptance standards of ASME BPVC, Section VIII, Division 1, Appendix 12.

p) SR-16 Simulated Post-Weld Heat Treatment (PWHT) of mechanical test coupons. Details of the PWHT thermal cycle shall be furnished by the purchaser and the extent of mechanical testing required shall be as agreed upon between the purchaser and manufacturer.

q) SR-17 Notch-toughness tests on the weld heat affected zone shall be performed on each lot in accordance with requirements of Sections 11.1 and 11.2. Impact retest as per Section 11.4.

r) SR-18 *Deleted - Substitution of wall thickness for yield strength is addressed in Section 8.1.1.*

s) SR-19 In addition to the CMTR required for each lot of fittings, copies of the starting raw material mill certification shall be furnished with the documentation package.

t) SR-20 In addition to the CMTR required for each lot of fittings, copies of the heat treat charts shall be furnished with the documentation package.

u) SR-21 In addition to the CMTR required for each lot of fittings, copies of the lab stress strain curves and tensile test results shall be furnished with the documentation package.

v) SR-22 Each quench and tempered fitting shall be individually hardness tested and the results reported on the CMTR for each fitting.

w) SR-23 Test samples to come from sacrificial fittings or full thickness prolongations. Alternatively, the purchaser and manufacturer can agree on an acceptable testing program using a separate test piece which has been exposed to all the forming and heating/cooling cycles the fitting is exposed to.

x) SR-24 This SR is intended to put forth additional quality requirements for a fitting that would be complementary to PSL2 line pipe in the API 5L Specification.

(1) Notch toughness testing in accordance with Section 11 for fittings NPS 5 and larger and wall thicknesses 0.236 in. and larger. One set (three specimens) of base metal and weld metal shall be tested at -20 °F or colder and show 20 ft-lb minimum average with no one specimen less than 15 ft-lb.

(2) Butt-welding ends of fittings, including 1 inch beyond the weld bevel, shall be subjected to magnetic particle examination. Magnetic particle examination shall be in accordance with ASME BPVC, Section V, Article 7 with acceptance standards to ASME BPVC, Section VIII, Division 1, Appendix 6.

(3) In addition to the CMTR requirements in section 16.4, the starting raw material mill certification shall be furnished with the documentation package.

(4) Test samples to come from sacrificial fittings or full thickness prolongations. Alternatively, the purchaser and manufacturer can agree on an acceptable testing program using a separate test piece which has been exposed to all the forming and heating/cooling cycles the fitting is exposed to.

(5) Parts shall be marked PSL2.

APPENDIX X2

This Appendix is supplementary and does not include mandatory requirements unless invoked by SR-1 of Appendix X1.

LONGITUDINAL – BEAD UNDERBEAD CRACKING TEST

Specimen Size – 2 in. wide, 3 in. long, in direction of rolling, full thickness (t) of material. Grit blast to obtain uniform surface.

Weld Bead – Deposit bead 1.5 in. long on surface of specimen (see Figure X2-1 below).

Electrode – Deposit with a 0.12 in. diameter, E6010 electrode, at a current of 100 amperes and 24 to 26 volts, speed of 10 in. per minute (energy input of 15 000 joules per inch).

Pre-tempering – Preheat or Precool to 100 °F.

Post Treatment – Hold specimen after welding for 24 hours, at room temperature, approximately 100 °F and then normalize at 1650 °F ± 25 °F for one hour. This serves to normalize the microstructure and stress relieves simultaneously.

Examination – Saw cut so as to expose center of weld bead and prepare sawed surfaces using 240 grit wet belt grinder. Inspect by wet fluorescent magnetic particle technique. Measure lengths of cracks developed and express as percentage (%) of bead length. An average of 50% cracking or less for an average of 10 specimens at the specified temperature is considered acceptable for welding since it has been found that such procedures seldom cause cracking in full size girth welds.

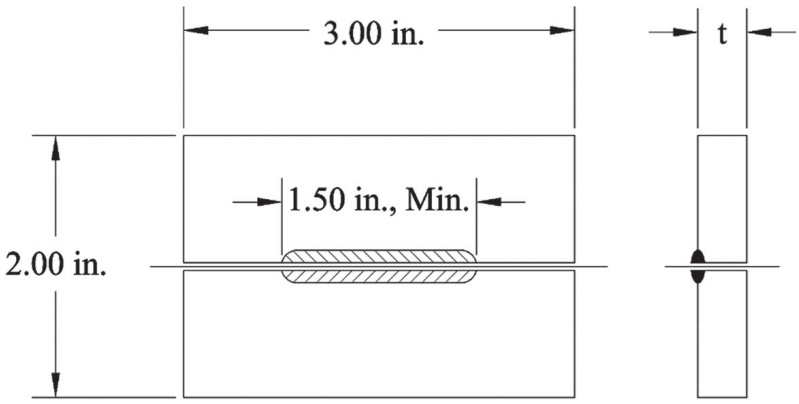

FIGURE X2-1
Longitudinal-Bead Underbead Cracking Test Specimen

APPENDIX X3

This Appendix is supplementary and does not include mandatory requirements.

RECOMMENDATIONS FOR SEGMENTING

Because of the residual stresses in an elbow due to heat treatment or body sizing, or the heat put into cutting in the field, elbows may have a tendency to spring when cut such that the 1% OOR is no longer met. Such spring back shall not be cause for rejection of the elbow unless otherwise agreed between the manufacturer and purchaser. Any resulting mismatch on either the outside or inside diameter needs to be corrected in the field by grinding, back-welding or bridging of weld to meet the appropriate piping code requirements for fit-up.

1.0 The following recommendations should be considered:

A) Purchase the desired segments required.

B) Arrange with manufacturer to cut desired segments from rough elbows produced for the job once the angle has been determined by the field. The timing of providing such elbows should be by agreement.

C) Order segments of varying degrees with the intent of using where possible and cold bending pipe to make up small differences in degrees of bend needed.

D) If cutting in the field is necessary, welding of a short segment of transition pipe to the cut end is recommended. This will result in better control of the fit-up and any grinding or back welding to transition the weld will be easier to make. Then the elbow can be installed in the ditch with a pipe to pipe weld which is easier to make using line-up clamps. A maximum of two cuts per elbow should be made leaving a factory end for one weld.

NOTE: The above recommendations are in descending order of ease of use in the field.

2.0 Some pipeline companies have ordered their elbows with short pipe transitions on each end to ensure pipe to pipe welds in the field in all cases. This can be done on all elbows including segments.

3.0 It should be recognized that elbows will usually have thicker walls than the mating pipe and that the extra wall could be positioned to the inside diameter. This extra wall can be used to help prevent the elbow from springing when heat treated or cut and will help offset the out-of-round by allowing transition grinding or back welding.

4.0 Even with 1% out-of-round, cut elbows can still have difficulty in maintaining the maximum offset allowed by code around the entire circumference. In most cases, the elbow was produced with a uniform circumference throughout the elbow and with some minimal mechanical “jacking” in the field can be rounded to make a good fit with minimal stress on the resulting girth weld. This should be discussed with the contractor prior to start of construction and guidelines for such corrections should be set.

LeKe Piping

Send your requirement

Share the size, grade, wall thickness, drawing or project specification for review.

DIRECT CONTACT

EMAIL LINK

info@lkpiping.com

WHATSAPP LINK

+86 139 0327 9556

TECHNICAL RESOURCES

lkpiping.com/technical/

FOR A FOCUSED REPLY

Include fitting type and size, grade, wall thickness, standard and inspection or project-document needs.

RESPONSE WITHIN 24 HOURS

Initial response within 24 hours, including weekends.

Longtan Industrial Zone, Yanta Road, Yanshan County, Cangzhou City, Hebei Province, China