LeKe Piping

BUTT-WELDING PIPE FITTINGS

BUTT-WELDING ELBOWS AND BENDS FULL SERVICE PRESSURE

DIN 2605-2:1995-06

Dimensions and pressure factors for steel elbows and bends

- FULL SERVICE PRESSURE
- 45 DEGREE ELBOWS
- 90 DEGREE ELBOWS
- 180 DEGREE BENDS
- DIMENSIONS IN MM
- DIMENSIONAL TOLERANCES

Technical reference prepared for product and project requirement review.

Confirm final material, dimensions, testing and documentation before ordering.

LEKE PIPING

www.lkpiping.com

DIN 2605-2:1995-06

Technical data navigation

Use the index below to open the corresponding technical section.

SECTION	CONTENTS	PAGE
Scope and normative references	Full-pressure application, definitions and referenced standards	**3**
Types and designation	45, 90 and 180 degree forms, radii and product designation	**4**
Dimensions - small and medium sizes	Table 1: dimensions and pressure factor data - first range	**5**
Dimensions - large sizes	Table 1 continued: dimensions and pressure factor data - second range	**7**
Tolerances and design assumptions	Tables 2-3: deviations, wall thickness factors and design basis	**9**
Welding ends and dimensions	End preparation, welding angle guidance and bend geometry	**10**

REFERENCE NOTE

Source dimensional values and footnotes are retained. Confirm the applicable material, grade, schedule and project specification before ordering.

Steel butt-welding pipe fittings

Part 2: Elbows and bends for use at full service pressure

DIN 2605-2

ICS 23.040.40

Supersedes DIN 2605-2, February 1991 edition.

Descriptors: Elbows, bends, pipe fittings, dimensions, steel, butt welding.

Formstücke zum Einschweißen – Rohrbogen – Teil 2: Voller Ausnutzungsgrad

In keeping with current practice in standards published by the International Organization for Standardization (ISO), a comma has been used throughout as the decimal marker.

Foreword

This standard has been prepared by Technical Committee *Einschweißfittings* of the *Normenausschuß Rohrverbindungen und Rohrleitungen* (Pipes, Pipe Joints and Pipelines Standards Committee).

Amendments

In comparison with the July 1991 edition of DIN 2605-2, the following amendments have been made:

a) for wall thickness series 5, dimensions s_i and s_a of fittings designed for pipes of sizes DN 15 to DN 600 have been reduced (cf. table 1);

b) in table 3, limit deviations for fittings designed for pipes of size diameter DN 300 have been included.

Previous edition

DIN 2605-2: 1991-02.

1 Scope and field of application

This standard specifies the design and dimensions of seamless and welded steel elbows and bends rated for the same internal pressure as the pipes to which they are to be connected (cf. clause 6). As the pressure rating of pipes is a function of their wall thickness, fittings have been classified according to wall thickness series (cf. table 1).

2 Normative references

This standard incorporates, by dated or undated reference, provisions from other publications. These normative references are cited at the appropriate places in the text and the titles of the publications are listed below. For dated references, subsequent amendments to or revisions of any of these publications apply to this standard only when incorporated into it by amendment or revision. For undated references, the latest edition of the publication referred to applies.

DIN 2609	Steel butt-welding pipe fittings – Technical delivery conditions
ISO 3419 : 1981*)	Non-alloy and alloy steel butt-welding fittings
ISO 4200 : 1985*)	Plain end steel tubes, welded and seamless – General tables of dimensions and masses per unit length
TRD 301*)	*Zylinderschalen unter innerem Überdruck* (Cylindrical shells subject to internal pressure)

DIN 2605-2 : 1995-06

3 Types and designation

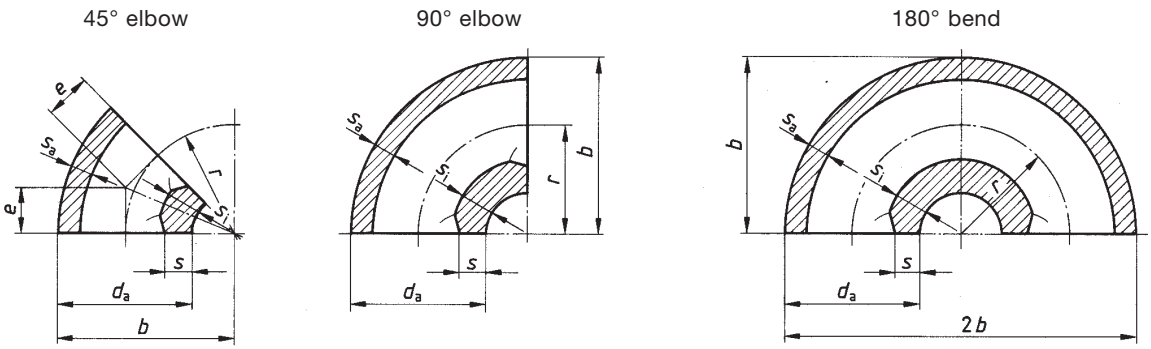

r is a design dimension, to be calculated as follows:

type 2: $r \approx 1{,}0 \cdot d_a$;
type 3: $r \approx 1{,}5 \cdot d_a$;
type 5: $r \approx 2{,}5 \cdot d_a$;
type 10: $r \approx 5{,}0 \cdot d_a$;
type 20: $r \approx 10{,}0 \cdot d_a$.

Figure 1

The standard designation for a type 3 (3), welded (W) 90° (90) elbow as specified in this standard (2) with d_a equal to 88,9 mm and s equal to 5,6 mm, made of material group F steel as specified in DIN 2609 (F) shall read:

Elbow DIN 2605 – 2 – 90 – 3 – 88,9 × 5,6 W – F

4 Dimensions

Table 1: Dimensions (For tolerances, see table 2.)

Nominal size DN	Pipe outside diameter, d_a [1]	Pipe type	Wall thickness series 1			2			3			4			5			r	b	e
			s	s_i	s_a [2]	s	s_i	s_a [2]	s	s_i	s_a [2]	s	s_i	s_a [2]	s	s_i	s_a [2]			
15	21,3	2		3,1	1,3		—	—		3,8	1,7		5,6	2,6		6,7	3,2	17,5	28	7
		3	1,6	2,2	1,4	—	—	—	2,0	2,7	1,8	3,2	4,2	2,8	4,0	5,2	3,4	28	38	12
		5		1,9	1,5		—	—		2,4	1,8		3,8	2,9		4,7	3,6	42,5	53	18
20	26,9	2		2,7	1,4		—	—		3,7	1,9		5,1	2,7		6,2	3,3	25	39	10
		3	1,6	2,4	1,4	—	—	—	2,3	3,4	2,0	3,2	4,6	2,7	4,0	5,6	3,3	29	43	12
		5		1,9	1,5		—	—		2,7	2,1		3,7	2,9		4,6	3,6	57,5	71	24
25	33,7	2		4,2	1,6		—	—		5,3	2,1		6,3	2,6		7,5	3,1	25	42	10
		3	2,0	2,9	1,7	—	—	—	2,6	3,7	2,2	3,2	4,5	2,7	4,0	5,5	3,4	38	56	16
		5		2,4	1,9		—	—		3,0	2,4		3,7	2,9		4,6	3,6	72,5	90	30
32	42,4	2		4,1	1,6		—	—		5,2	2,1		6,9	2,9		7,5	3,1	32	53	13
		3	2,0	2,9	1,7	—	—	—	2,6	3,7	2,2	3,6	5,0	3,1	4,0	5,5	3,4	48	69	20
		5		2,3	1,9		—	—		3,0	2,4		4,2	3,3		4,6	3,6	92,5	114	38
40	48,3	2		3,9	1,6		—	—		4,9	2,1		7,3	3,2		8,8	3,9	38	62	16
		3	2,0	2,8	1,7	—	—	—	2,6	3,6	2,3	4,0	5,5	3,4	5,0	6,8	4,2	57	82	24
		5		2,3	1,9		—	—		3,0	2,4		4,6	3,7		5,7	4,5	107,5	132	45
50	60,3	2		3,5	1,7		—	—		5,0	2,4		7,6	3,7		9,2	4,5	51	81	21
		3		2,7	1,8		—	—		3,9	2,5		6,0	3,9		7,4	4,8	76	106	32
		5	2,0	2,3	1,9	—	—	—	2,9	3,4	2,7	4,5	5,2	4,1	5,6	6,4	5,1	135	165	56
		10		2,2	1,9		—	—		3,2	2,8		4,9	4,3		6,0	5,3	254	284	105
		20		2,1	2,0		—	—		3,0	2,9		4,7	4,4		5,8	5,4	508	538	210
65	76,1	2		4,1	1,9		—	—		5,1	2,4		8,6	4,0		11,8	5,6	63	102	26
		3		3,1	2,0		—	—		3,9	2,5		6,7	4,3		9,3	6,0	95	133	39
		5	2,3	2,7	2,1	—	—	—	2,9	3,3	2,7	5,0	5,7	4,6	7,1	8,1	6,5	175	213	73
		10		2,5	2,2		—	—		3,2	2,8		5,4	4,8		7,6	6,7	318	356	132
		20		2,4	2,3		—	—		3,0	2,9		5,2	4,9		7,3	6,9	635	673	268

Dashes stand for non-standardized sizes.

[1]) Pipe outside diameters have been selected in accordance with series 1 as specified in ISO 4200.

[2]) For butt joints to be made properly, the outer bend thickness, s_a, at the abutting edge shall at least be equal to the pipe wall thickness, s.

(continued)

Table 1 (continued)

Nominal size DN	Pipe outside diameter, d_a [1]	Pipe type	Wall thickness series 1			2			3			4			5			r	b	e
			s	s_i	s_a [2]	s	s_i	s_a [2]	s	s_i	s_a [2]	s	s_i	s_a [2]	s	s_i	s_a [2]			
80	88,9	2		4,0	1,9		—	—		5,5	2,6		9,4	4,6		13,0	6,4	76	121	32
		3		3,1	2,0		—	—		4,3	2,8		7,4	4,8		10,5	6,8	114	159	47
		5	2,3	2,7	2,1	—	—	—	3,2	3,7	3,0	5,6	6,4	5,1	8,0	9,1	7,3	205	250	85
		10		2,5	2,2		—	—		3,5	3,1		6,1	5,4		8,6	7,6	381	425	158
		20		2,4	2,3		—	—		3,3	3,2		5,8	5,5		8,3	7,8	762	806	316
100	114,3	2		4,3	2,2		—	—		5,9	3,0		10,2	5,2		13,9	7,1	102	159	42
		3		3,4	2,3		—	—		4,7	3,1		8,2	5,5		11,3	7,6	152	210	63
		5	2,6	3,0	2,4	—	—	—	3,6	4,1	3,3	6,3	7,2	5,8	8,8	10,0	8,0	270	327	112
		10		2,8	2,5		—	—		3,9	3,5		6,8	6,0		9,4	8,4	508	565	210
		20		2,7	2,6		—	—		3,8	3,6		6,5	6,2		9,1	8,6	1016	1073	421
125	139,7	2		4,3	2,2		—	—		6,5	3,3		10,1	5,2		15,6	8,1	127	197	53
		3		3,4	2,3		—	—		5,2	3,5		8,2	5,5		12,8	8,6	190	260	79
		5	2,6	3,0	2,4	—	—	—	4,0	4,6	3,7	6,3	7,2	5,8	10	11,3	9,1	330	400	137
		10		2,8	2,5		—	—		4,3	3,9		6,8	6,1		10,7	9,5	635	705	263
		20		2,7	2,6		—	—		4,2	3,9		6,5	6,2		10,3	9,7	1270	1340	526
150	168,3	2		4,3	2,2		6,5	3,3		7,3	3,7		11,4	5,8		17,3	8,9	152	237	63
		3		3,4	2,3		5,2	3,5		5,9	3,9		9,2	6,2		14,1	9,5	229	313	95
		5	2,6	3,0	2,4	4,0	4,6	3,7	4,5	5,2	4,1	7,1	8,1	6,5	11	12,5	10,0	390	474	162
		10		2,8	2,5		4,3	3,9		4,9	4,3		7,6	6,8		11,8	10,5	762	846	316
		20		2,7	2,6		4,2	3,9		4,7	4,4		7,4	7,0		11,3	10,7	1524	1608	631
200	219,1	2		4,7	2,4		7,2	3,7		10,0	5,2		12,6	6,6		19,3	10,2	203	313	84
		3		3,8	2,6		5,8	3,9		8,1	5,5		10,3	7,0		15,9	10,8	305	414	126
		5	2,9	3,3	2,7	4,5	5,2	4,1	6,3	7,2	5,8	8,0	9,1	7,3	12,5	14,2	11,4	510	620	211
		10		3,1	2,8		4,8	4,3		6,8	6,1		8,6	7,7		13,3	11,9	1016	1126	421
		20		3,0	2,9		4,7	4,4		6,5	6,2		8,3	7,8		12,9	12,2	2032	2142	842
250	273	2		4,7	2,4		7,9	4,2		10,0	5,2		13,8	7,3		21,9	11,6	254	391	105
		3		3,8	2,6		6,4	4,4		8,1	5,5		11,3	7,7		18,1	12,3	381	518	158
		5	2,9	3,3	2,7	5,0	5,7	4,6	6,3	7,2	5,8	8,8	10,0	8,1	14,2	16,1	12,9	650	787	269
		10		3,1	2,8		5,4	4,8		6,8	6,1		9,4	8,5		15,2	13,6	1270	1407	526
		20		3,0	2,9		5,2	4,9		6,5	6,2		9,1	8,6		14,6	13,9	2540	2677	1052

Dashes stand for non-standardized sizes.
For [1]) and [2]), see page 3.

(continued)

Table 1 (continued)

Nominal size DN	Pipe outside diameter, d_a [1]	Pipe type	Wall thickness series 1			2			3			4			5			r	b	e
			s	s_i	s_a [2]	s	s_i	s_a [2]	s	s_i	s_a [2]	s	s_i	s_a [2]	s	s_i	s_a [2]			
300	323,9	2		4,6	2,4		8,8	4,7		11,1	5,9		15,6	8,3		24,6	13,1	305	467	126
		3		3,7	2,6		7,2	4,9		9,1	6,2		12,8	8,7		20,3	13,9	457	619	189
		5	2,9	3,3	2,7	5,6	6,4	5,2	7,1	8,1	6,5	10	11,4	9,2	16	18,1	14,6	775	937	321
		10		3,1	2,8		6,0	5,4		7,6	6,8		10,7	9,6		17,1	15,3	1524	1626	631
		20		3,0	2,9		5,8	5,5		7,4	7,0		10,3	9,8		16,5	15,6	3048	3210	1261
350	355,6	2		4,9	2,7		8,4	4,7		12,0	6,7		16,4	9,2		25,8	14,5	356	533	148
		3		4,1	2,8		7,0	4,9		10,0	7,0		13,8	9,7		21,8	15,3	533	711	221
		5	3,2	3,7	3,0	5,6	6,4	5,2	8,0	9,1	7,4	11	12,5	10,1	17,5	19,8	16,0	850	1028	352
		10		3,4	3,1		6,0	5,4		8,5	7,7		11,7	10,6		18,6	16,8	1778	1956	737
		20		3,3	3,2		5,8	5,5		8,3	7,9		11,3	10,8		18,0	17,1	3556	3734	1473
400	406,4	2		4,9	2,7		9,5	5,3		13,2	7,4		18,7	10,4		29,5	16,5	406	610	168
		3		4,0	2,8		7,9	5,6		11,0	7,7		15,6	11,0		24,9	17,4	610	813	253
		5	3,2	3,7	3,0	6,3	7,2	5,8	8,8	10,0	8,1	12,5	14,2	11,5	20	22,6	18,2	970	1173	402
		10		3,4	3,1		6,7	6,1		9,4	8,5		13,3	12,0		21,2	19,2	2032	2235	842
		20		3,3	3,2		6,8	6,2		9,1	8,6		12,9	12,3		20,6	19,5	4064	4267	1683
450	457	2		6,1	3,4		9,5	5,3		15,0	8,4		21,1	11,8		32,7	18,3	457	686	189
		3		5,0	3,5		7,9	5,6		12,5	8,8		17,7	12,4		27,6	19,4	686	914	284
		5	4,0	4,6	3,7	6,3	7,1	5,8	10	11,3	9,2	14,2	16,0	13,0	22,2	25,0	20,3	1122	1350	465
		10		4,3	3,9		6,7	6,1		10,7	9,6		15,1	13,6		23,6	21,3	2286	2515	947
		20		4,2	4,0		6,5	6,2		10,3	9,8		14,6	13,9		22,8	21,7	4572	4801	1894
500	508	2		6,1	3,4		9,5	5,3		16,5	9,2		23,8	13,3		36,8	20,7	508	762	210
		3		5,0	3,5		7,9	5,6		13,8	9,7		20,0	14,0		31,1	21,8	762	1016	316
		5	4,0	4,6	3,7	6,3	7,2	5,8	11	12,5	10,1	16	18,1	14,7	25	28,2	22,9	1245	1500	516
		10		4,3	3,9		6,7	6,1		11,7	10,6		17,0	15,4		26,5	23,9	2540	2794	1052
		20		4,2	4,0		6,5	6,2		11,3	10,8		16,5	15,7		25,7	24,4	5080	5334	2104
600	610	2		7,6	4,2		9,5	5,3		18,7	10,4		26,1	14,6		44,1	24,8	610	914	253
		3		6,3	4,4		7,9	5,6		15,7	11,0		21,9	15,3		37,3	26,2	914	1219	379
		5	5,0	5,7	4,6	6,3	7,1	5,8	12,5	14,1	11,5	17,5	19,7	16,1	30	33,7	27,5	1525	1830	632
		10		5,4	4,8		6,7	6,1		13,3	12,0		18,6	16,8		31,9	28,7	3050	3355	1263
		20		5,2	4,9		6,5	6,2		12,9	12,3		18,0	17,1		30,8	29,3	6100	6405	2527
700	711	2		7,4	4,3		10,7	6,0		18,5	10,5		29,5	16,7		46,8	26,5	711	1066	295
		3		6,2	4,5		8,8	6,3		15,5	11,0		24,8	17,6		39,7	28,0	1067	1422	442
		5	5,0	5,6	4,7	7,1	8,0	6,6	12,5	14,0	11,5	20	22,5	18,4	32	35,9	29,4	1778	2133	737
		10		5,3	4,9		7,6	6,9		13,3	12,0		—	—		—	—	3555	3911	1473
		20		5,2	4,9		7,3	7,0		12,9	12,3		—	—		—	—	7110	7466	945

Dashes stand for non-standardized sizes.
For [1]) and [2]), see page 3.

(continued)

Table 1 (concluded)

Nominal size DN	Pipe outside diameter, d_a [1]	Pipe type	Wall thickness series 1			2			3			4			5			r	b	e
			s	s_i	s_a [2]	s	s_i	s_a [2]	s	s_i	s_a [2]	s	s_i	s_a [2]	s	s_i	s_a [2]			
800	813	2		8,3	4,8		12,0	6,8		18,5	10,5		32,8	18,5		52,8	29,9	813	1220	337
		3		7,0	5,0		10,0	7,1		15,5	11,0		27,6	19,5		44,7	31,5	1219	1626	505
		5	5,6	6,3	5,2	8,0	9,0	7,4	12,5	14,0	11,5	22,2	24,9	20,4	36	40,4	33,0	2033	2439	842
		10		6,0	5,4		8,5	7,7		13,3	12,0		—	—		—	—	4065	4472	1684
		20		5,8	5,5		8,3	7,9		12,9	12,3		—	—		—	—	8130	8537	3368
900	914	2		9,3	5,3		15,0	8,4		18,5	10,5		36,9	20,9		58,6	33,2	914	1371	379
		3		7,8	5,6		12,6	8,8		15,5	11,0		31,1	21,9		49,6	35,0	1372	1829	568
		5	6,3	7,1	5,8	10	11,4	9,2	12,5	14,0	11,5	25	28,1	23,0	40	44,9	36,7	2285	2742	947
		10		6,7	6,1		10,8	9,6		13,3	12,0		—	—		—	—	4570	5027	1893
		20		6,5	6,2		10,5	9,8		12,9	12,3		—	—		—	—	9140	9597	3768
1000	1016	2		9,3	5,3		15,0	8,4		18,5	10,5		41,3	23,3		65,9	37,3	1016	1524	421
		3		7,8	5,6		12,6	8,8		15,5	11,0		34,8	24,6		55,8	39,3	1524	2032	631
		5	6,3	7,1	5,8	10	11,4	9,2	12,5	14,0	11,5	28	31,5	25,7	45	50,5	41,3	2540	3048	1052
		10		6,7	6,1		10,8	9,6		13,3	12,0		—	—		—	—	5080	5588	2104
		20		6,5	6,2		10,5	9,8		12,9	12,3		—	—		—	—	10160	10668	4208
1200	1220	2		9,3	5,4		18,5	10,5		—	—		—	—		—	—	1220	1830	505
		3		7,8	5,6		15,5	11,0		—	—		—	—		—	—	1830	2440	758
		5	6,3	7,1	5,8	12,5	14,0	11,5	—	—	—	—	—	—	—	—	—	3050	3660	1263
		10		6,7	6,1		13,3	12,0		—	—		—	—		—	—	6100	6710	2527
		20		6,5	6,2		12,9	12,3		—	—		—	—		—	—	12200	12810	5058
1400	1420	2		9,3	5,4		18,5	10,5		—	—		—	—		—	—	1420	2130	588
		3		7,8	5,6		15,5	11,0		—	—		—	—		—	—	2130	2840	882
		5	6,3	7,1	5,8	12,5	14,0	11,5	—	—	—	—	—	—	—	—	—	3550	4260	1471
		10		6,7	6,1		13,3	12,0		—	—		—	—		—	—	7100	7810	2941
		20		6,5	6,2		12,9	12,3		—	—		—	—		—	—	14200	14910	5882
1600	1620	2		9,3	5,3		18,5	10,5		—	—		—	—		—	—	1620	2430	671
		3		7,8	5,6		15,5	11,0		—	—		—	—		—	—	2430	3240	1007
		5	6,3	7,1	5,8	12,5	14,0	11,5	—	—	—	—	—	—	—	—	—	4050	4860	1678
		10		6,7	6,1		13,3	12,0		—	—		—	—		—	—	8100	8910	3355
		20		6,5	6,2		12,9	12,3		—	—		—	—		—	—	16200	17010	6710

Dashes stand for non-standardized sizes.

For [1]) and [2]), see page 3.

5 Tolerances

Table 2: Lower limit deviations for wall thicknesses
(See DIN 2609 for upper limit deviations.)

Pipe nominal size, DN	Wall thicknesses	Lower limit deviation
Up to **600**	All sizes	– 12,5 %
Above **600**	Up to 10 mm	– 0,35 mm
	Above 10 mm	– 0,50 mm

Table 3: Limit deviations for dimension b[3])

Pipe nominal size DN	Limit deviations		
	b for 45° elbow	b for 90° elbow	$2b$ for 180° bend
15 to **65**	± 6,0	± 2,5	± 8,0
80 to **100**	± 7,0	± 3,0	± 9,0
125 to **200**	± 8,5	± 3,5	± 10,0
250	± 9,5	± 4,0	± 14,0
300 to **450**	± 12,0	± 5,0	± 14,0
500 to **600**	± 14,5	± 6,0	± 16,0
700			To be agreed.
800 or more	± 19,0	± 8,0	

[3]) Dimension b is to be measured as illustrated in figure 1. Limit deviations refer to elbows and bends designed for pipes of types 2, 3 and 5. For types 10 and 20, the limit deviations for b shall be subject to agreement.

6 Design assumptions

The wall thicknesses of elbows and bends, s_i and s_a, have been designed so that they withstand the same internal pressure as the connecting pipes when selected in compliance with table 1. In accordance with *Technische Regel für Dampfkessel* (Code of practice for steam boilers) TRD 301, the design calculation has been based on the following assumptions:

a) limit deviations for pipes and fittings as specified in table 2;
b) identical materials;
c) identical welding factor for longitudinal welds;
d) identical outside diameters;
e) no allowance included for corrosion.[4])

7 Other wall thicknesses

Elbows and bends with wall thicknesses other than those specified in table 1 may also be ordered on the basis of this standard. In such cases, the next smallest pipe wall thickness, s, given in table 1 shall be used to establish the relevant conversion factor for dimensions s_i and s_a (cf. Explanatory notes).

[4]) If the wall thickness of pipes, s, has been designed with a significant allowance (i.e. more than 100 %) for corrosion, the outer bend thickness of fittings, s_a, must be increased accordingly. Thus, when ordering fittings, make sure that the outer bend thickness, s_a, at the abutting edge is at least equal to s.

DIN 2605-2 : 1995-06

8 Preparation of abutting edges

If required by the manufacturing process, elbows and bends may be designed with a uniform wall thickness, s_i. In such cases, the abutting edges of fittings may be bevelled to an angle of 15° to 18° on the inside and/or to an angle of 27° to 30° on the outside.

9 Technical delivery conditions

For the technical delivery conditions for fittings in compliance with this standard, see DIN 2609.

Explanatory notes

This standard has been prepared at the request of users of piping systems. The fitting dimensions are based on the pipe outside diameter as specified in ISO 4200 (series 1) and on the radii and lengths of fittings specified in ISO 3419.

The thickness of the outer bend, s_a, and that of the inner bend, s_i, have been selected so that elbows and bends withstand the same internal pressure as the connecting pipe. As illustrated in figure 2, s_i and s_a need not be continuous throughout.

$s_a = s_i > s$

$s_a \leq s$ (or more at fitting end) $\geq s$
$s_i > s$
$\alpha \geq 15° \leq 18°$

$s_a > s$
$s_i > s$

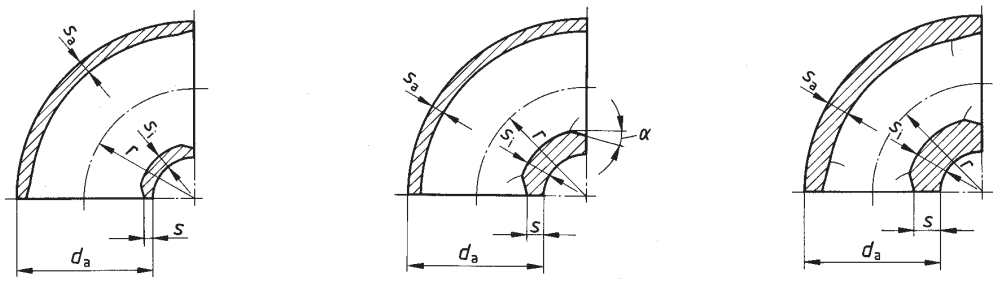

Figure 2: Welding end design

Wall thicknesses listed in table 1 take into account the geometry-related differences in stress throughout the cross sections of elbows and bends.

Figure 3 shows the measuring points for dimensions s, s_a and s_i. Intermediate values, such as s'_a and s'_i, shall be calculated based on the formulas given below. Assuming that the stress pattern (or the corresponding wall thickness) varies as a function of sine α, the following values are obtained:

$$s'_a = s_a + (s - s_a) \cdot \cos \alpha_a \quad \text{or} \quad s'_a = s_a + (s - s_a) \cdot \cos \text{rad} \frac{2\,U_{Ta}}{d_a}$$

$$s'_i = s + (s_i - s) \cdot \cos \alpha_i \quad \text{or} \quad s'_i = s + (s_i - s) \cdot \cos \text{rad} \frac{2\,U_{Ti}}{d_a}$$

where

α_a	is the angle between the horizontal centre line and the line through the measuring point;
α_i	is the angle between the vertical centre line and the line through the measuring point;
U_{Ta} and U_{Ti}	are the arc lengths of angles α_a and α_i.

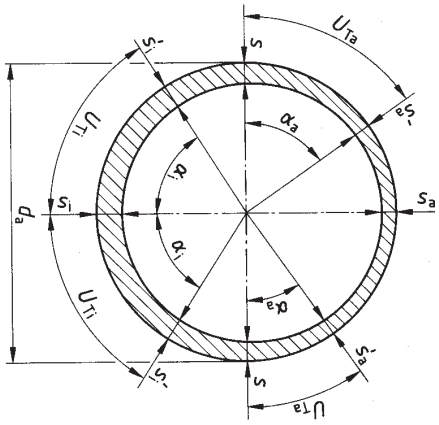

Figure 3: Elbow or bend cross section (schematic)

In line with the following example, this standard may also be referred to when designing elbows or bends for pipes with wall thicknesses other than those specified in table 1.

EXAMPLE

If, for instance, elbows or bends are to be ordered for a type 3 pipe with an outer diameter of 88,9 mm and a non-standardized thickness of 6,3 mm, refer to the next smallest pipe wall thickness (5,6 mm) in table 1 and read the relevant s_i (7,4 mm) and s_a (4,8 mm) dimensions for a type 3 pipe off the chart. The wall thickness ratio or conversion factor is then to be calculated on the basis of the values obtained.

Calculation of conversion factor:

$$\frac{s_i}{s} = \frac{7,4}{5,6} = 1,321$$

$$\frac{s_a}{s} = \frac{4,8}{5,6} = 0,857$$

The conversion factor is then used to determine the appropriate thickness of the fittings to be ordered:

s_i = 6,3 mm × 1,321 = 8,3 mm

s_a = 6,3 mm × 0,857 = 5,4 mm

By calculating s_i and s_a according to this example, the values obtained can be assumed to include the necessary safety factor for the use of fittings at full service pressure.

Send your requirement

Send a drawing, product list, size, material grade, standard, schedule or wall thickness, testing and project document requirements.

EMAIL	info@lkpiping.com
WHATSAPP	+86 139 0327 9556
TECHNICAL RESOURCES	www.lkpiping.com/technical/

RESPONSE AND DOCUMENT COORDINATION

Initial enquiries are answered within 24 hours, including weekends, by email or WhatsApp. Drawing review, material/standard matching and project document requirements can be discussed and organized with the buyer. Third-party inspection can be buyer-nominated or coordinated on request.

ADDRESS

Longtan Industrial Zone, Yanta Road, Yanshan County, Cangzhou City,
Hebei Province, China